[Driver Side J/B Inner Circuit]
(LHD)

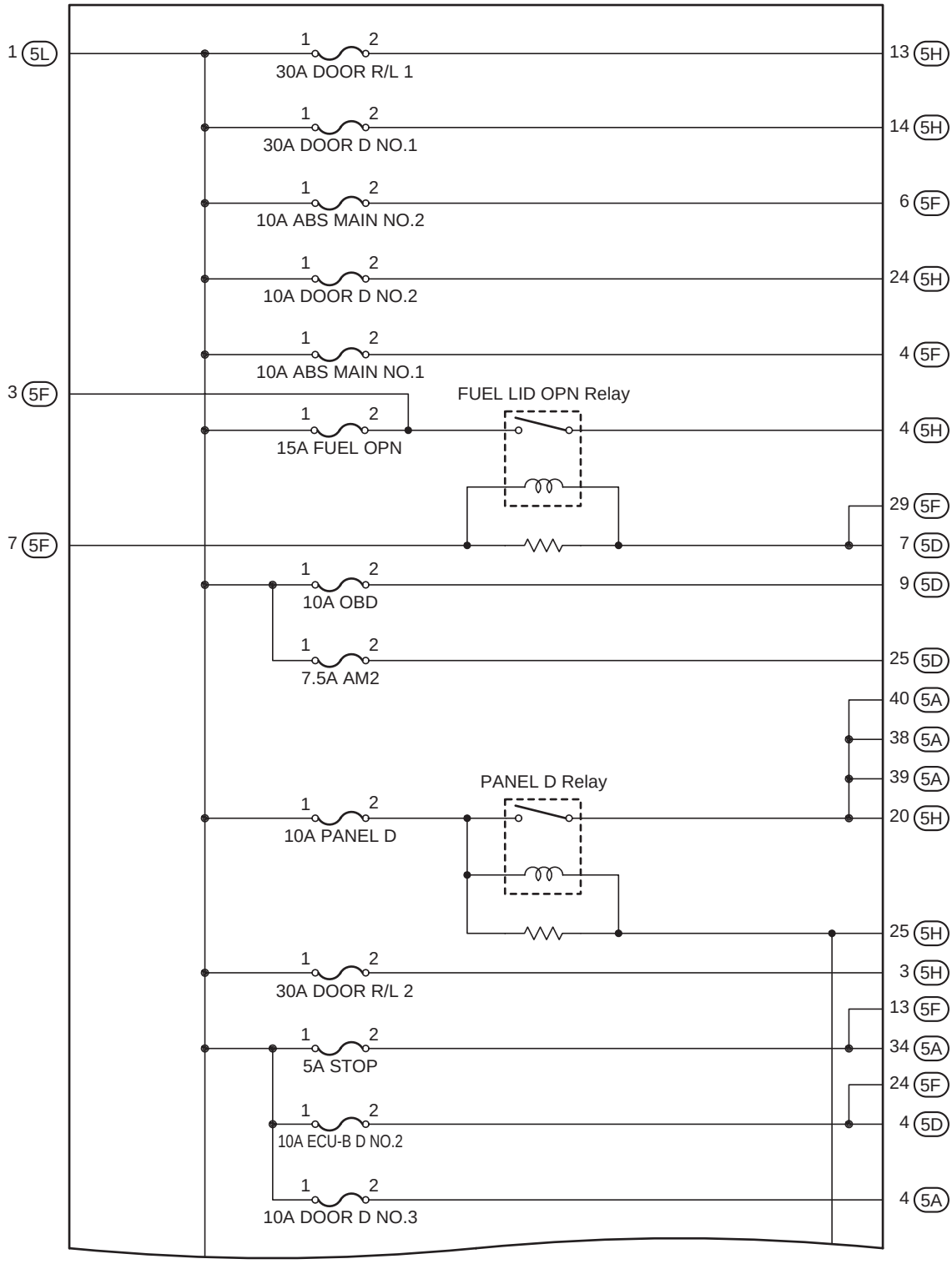

(Cont. Next Page)

[Driver Side J/B Inner Circuit]
(LHD)

(Cont'd)

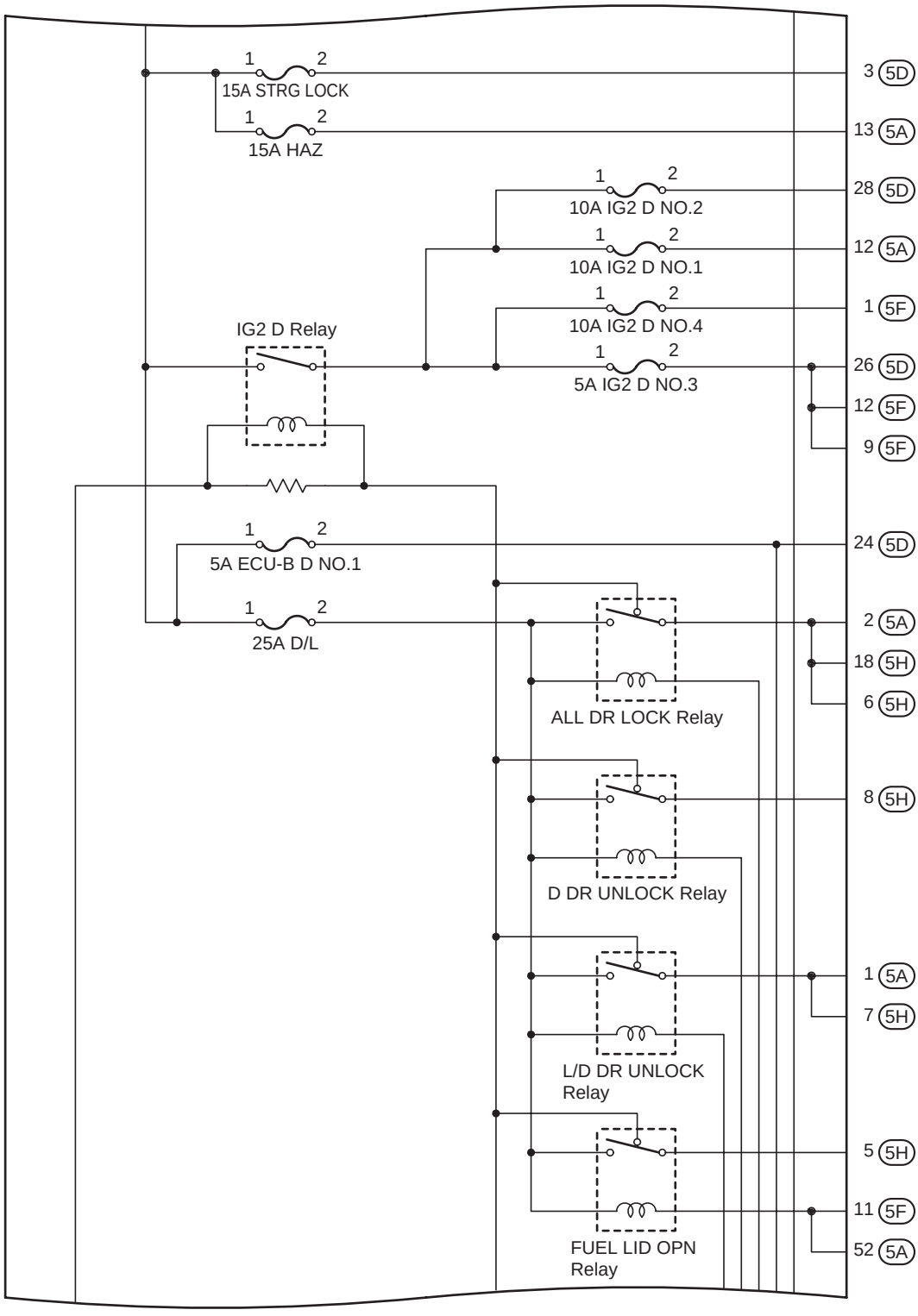

(Cont. Next Page)

[Driver Side J/B Inner Circuit]
(LHD)

(Cont'd)

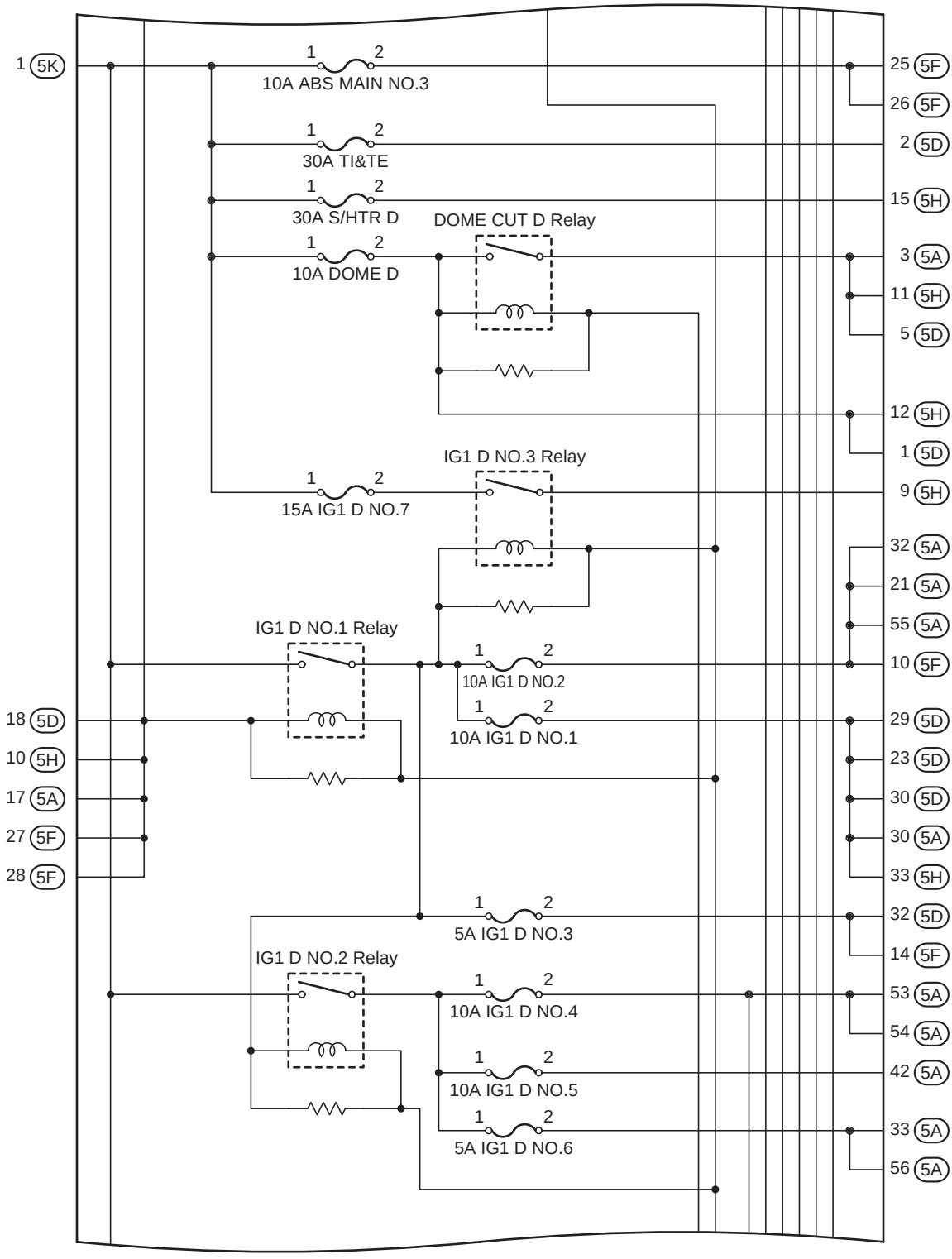

(Cont. Next Page)

[Driver Side J/B Inner Circuit]
(LHD)

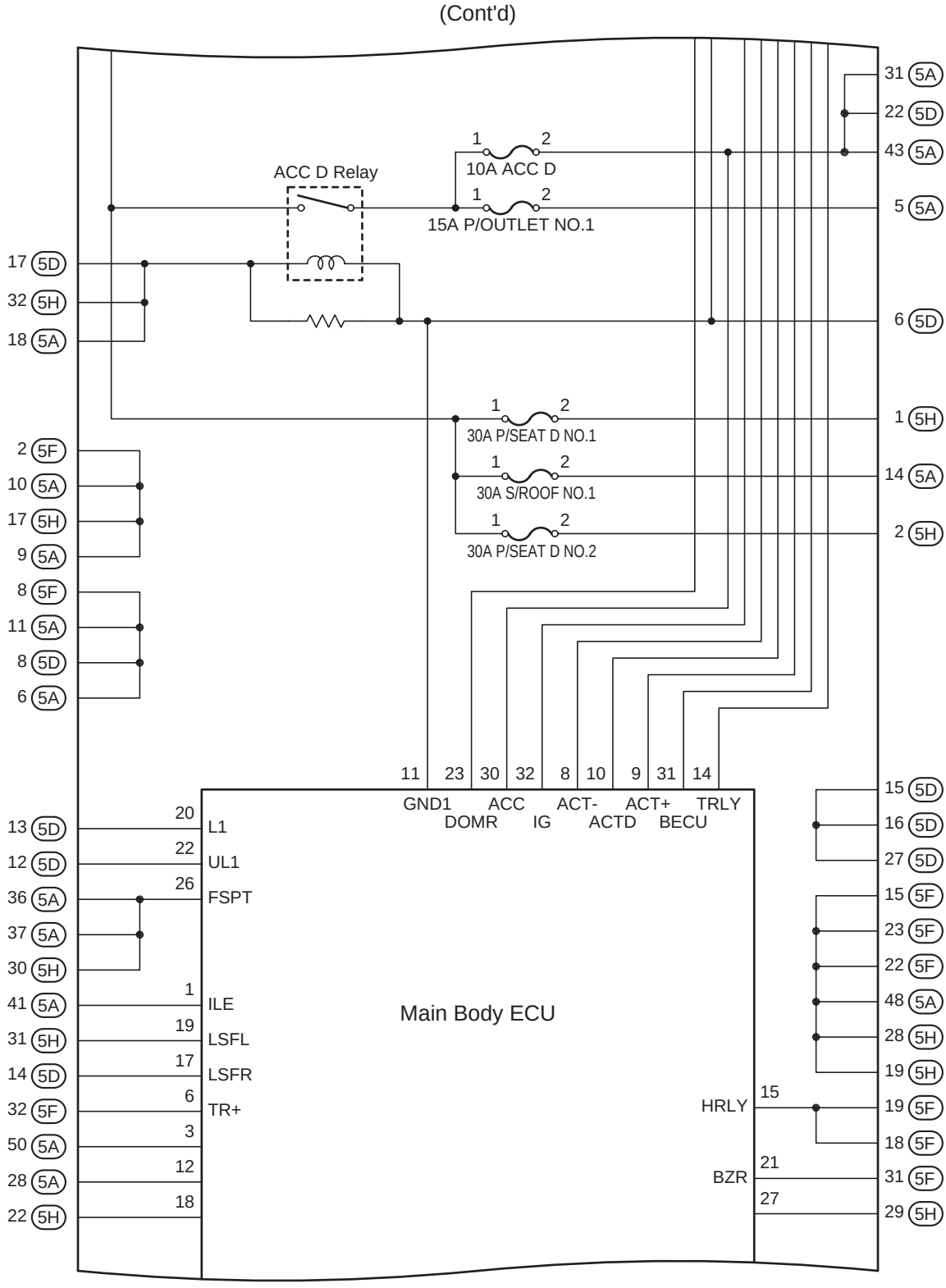

(Cont. Next Page)

[Driver Side J/B Inner Circuit]
(LHD)

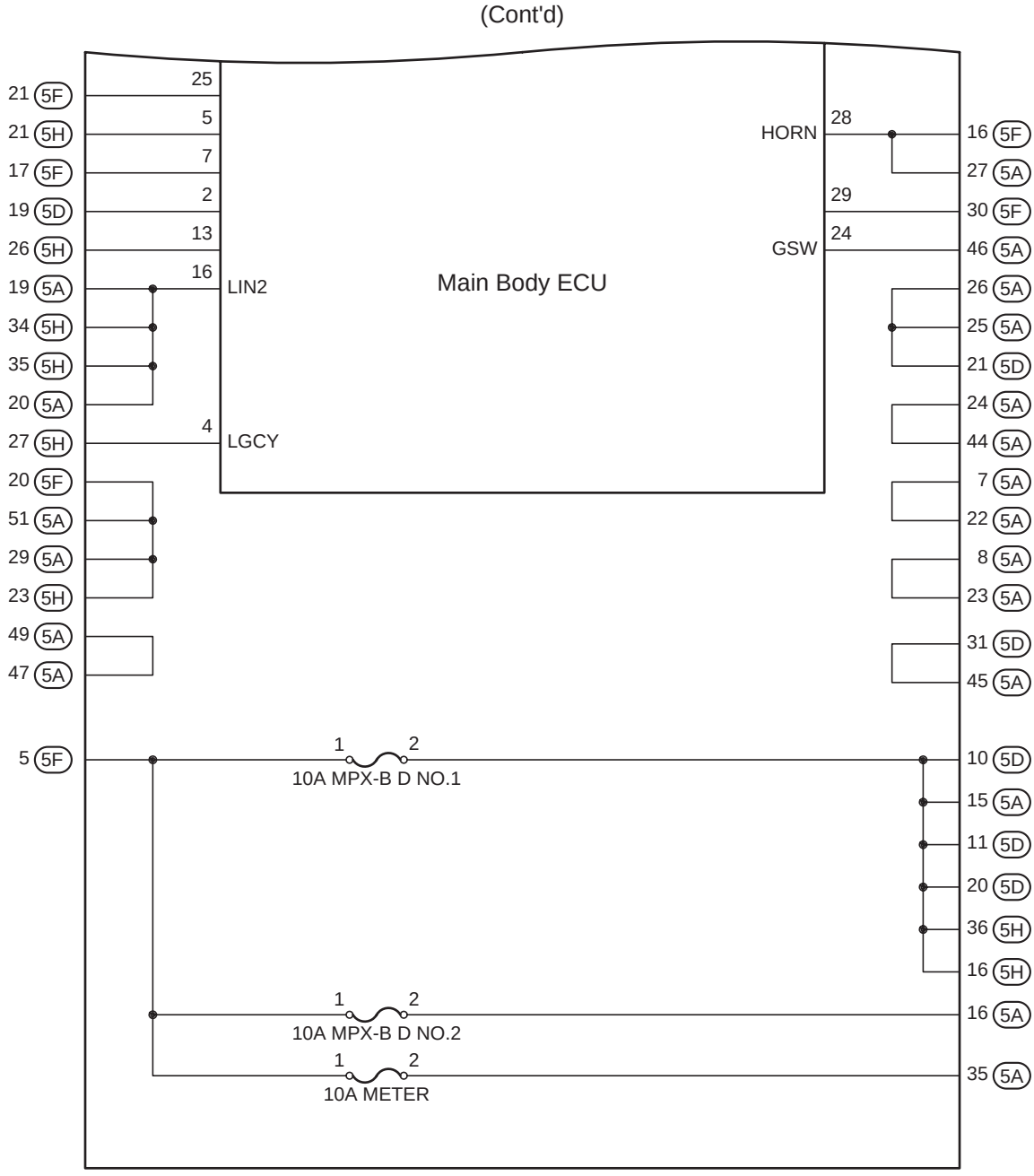

[Driver Side J/B Inner Circuit]
(RHD)

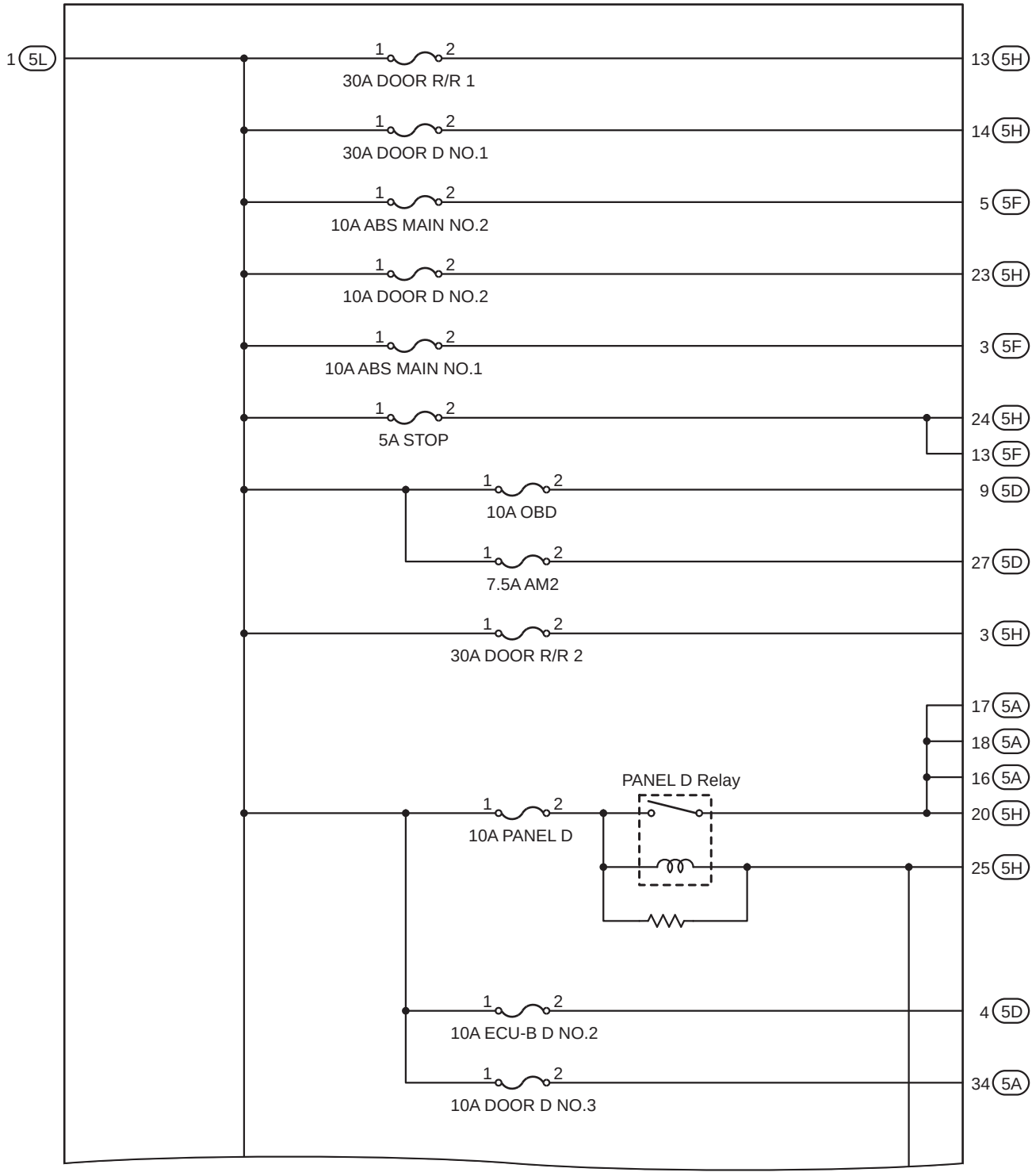

(Cont. Next Page)

[Driver Side J/B Inner Circuit]
(RHD)

(Cont'd)

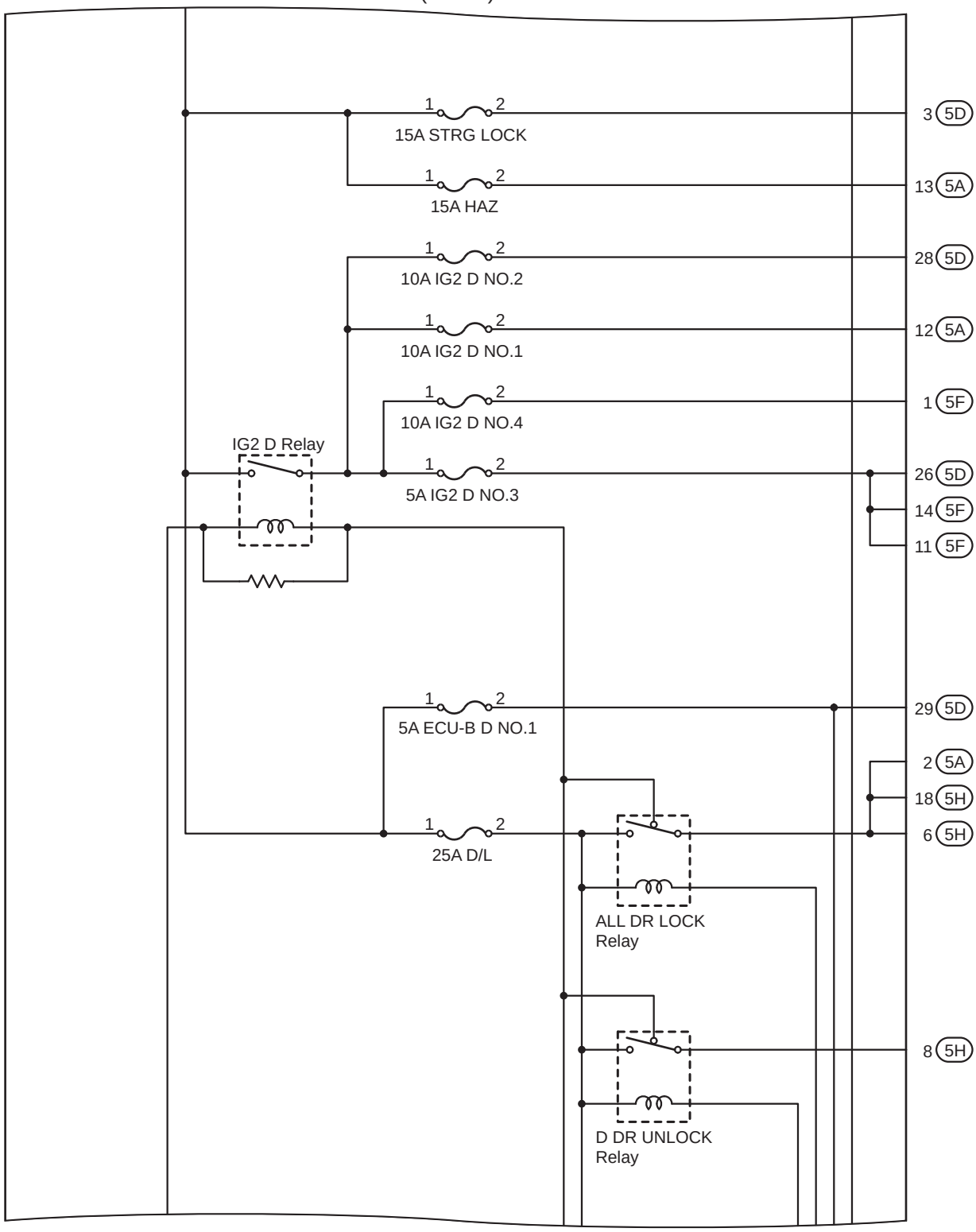

(Cont. Next Page)

[Driver Side J/B Inner Circuit]
(RHD)

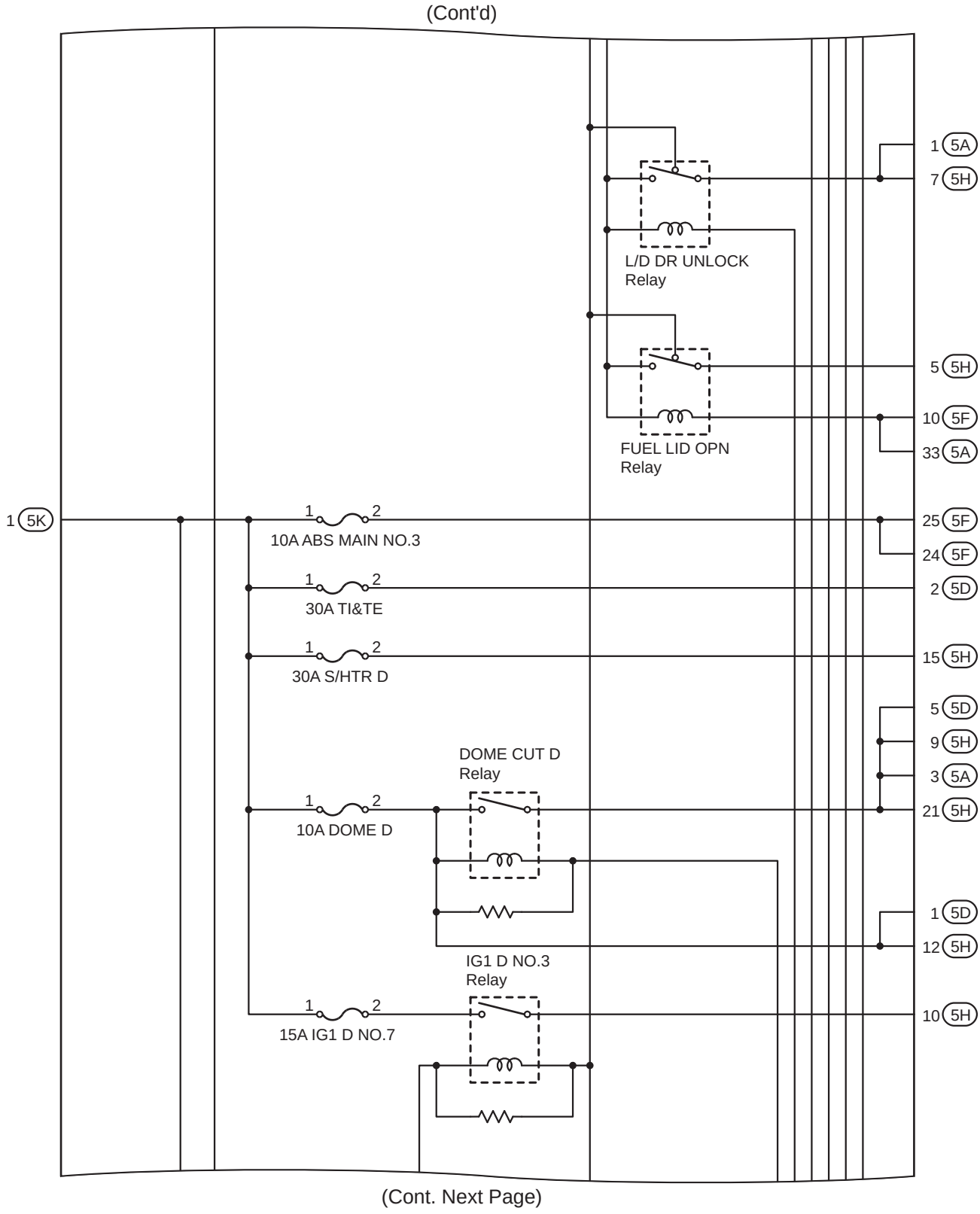

(Cont. Next Page)

[Driver Side J/B Inner Circuit]
(RHD)

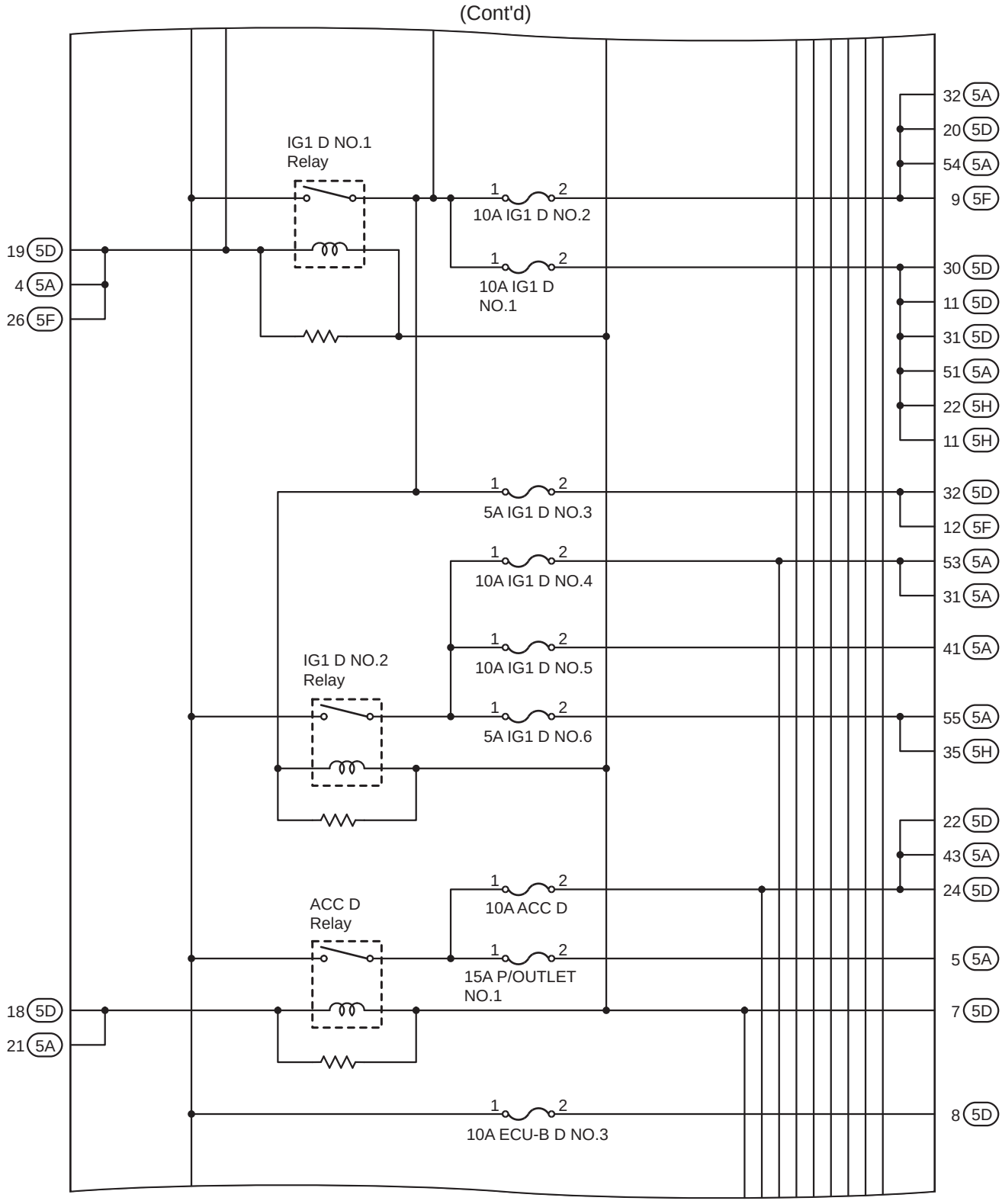

(Cont. Next Page)

[Driver Side J/B Inner Circuit]
(RHD)

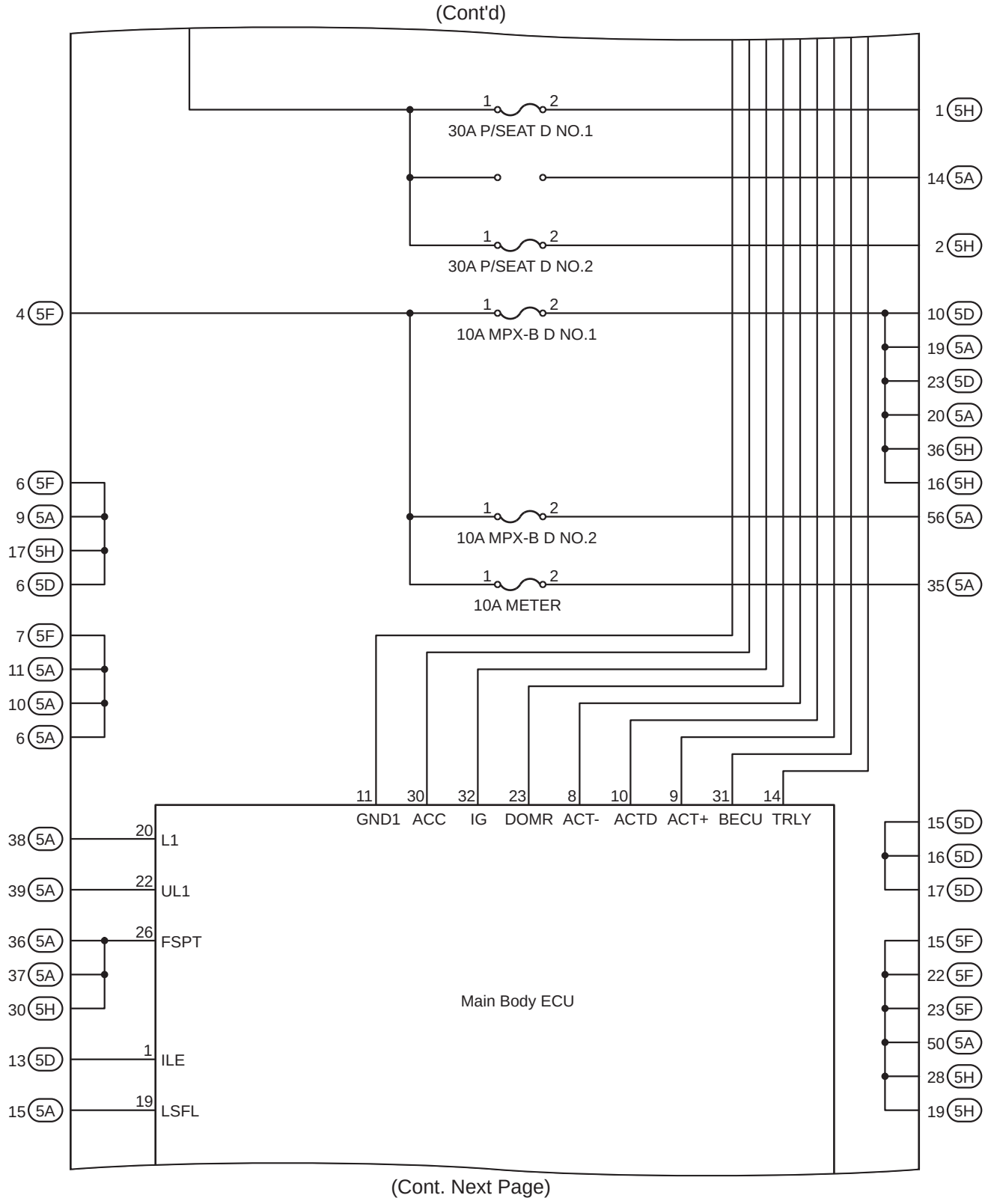

(Cont. Next Page)

[Driver Side J/B Inner Circuit]
(RHD)
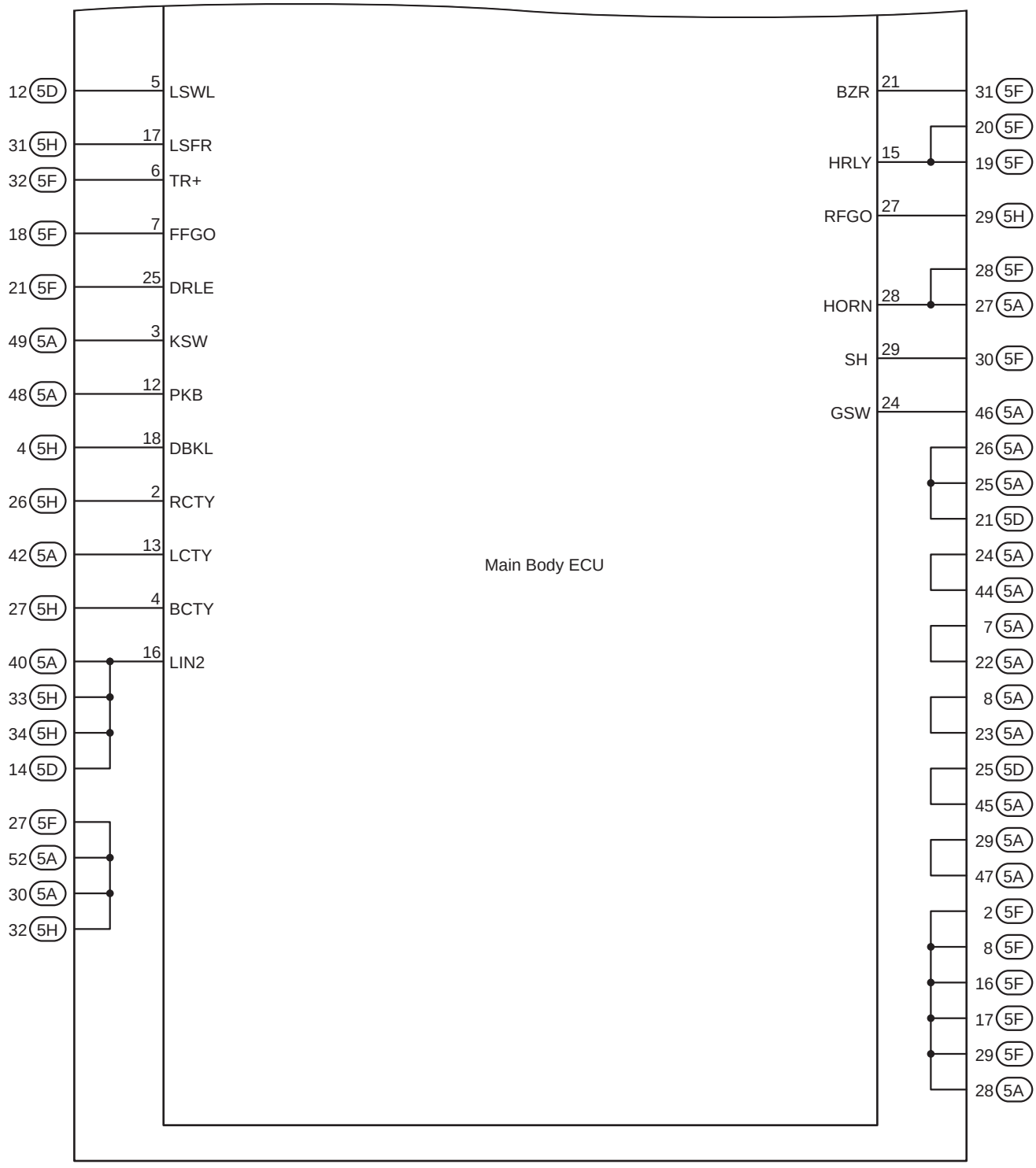
(Cont'd)