[Luggage Room R/B No. 2 and Luggage Room J/B No. 2 Inner Circuit]

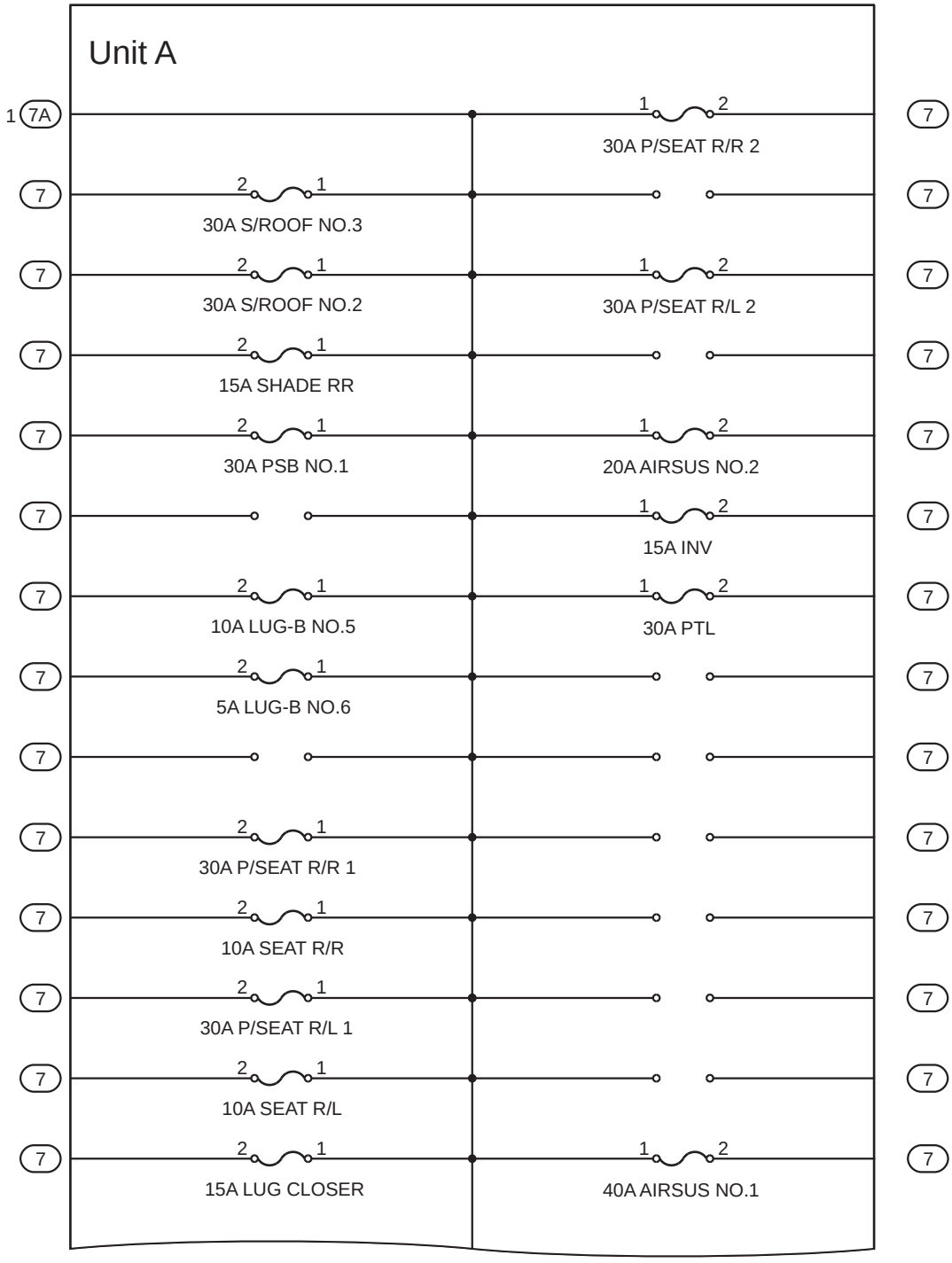

(Cont. Next Page)

[Luggage Room R/B No. 2 and Luggage Room J/B No. 2 Inner Circuit]

(Cont'd)

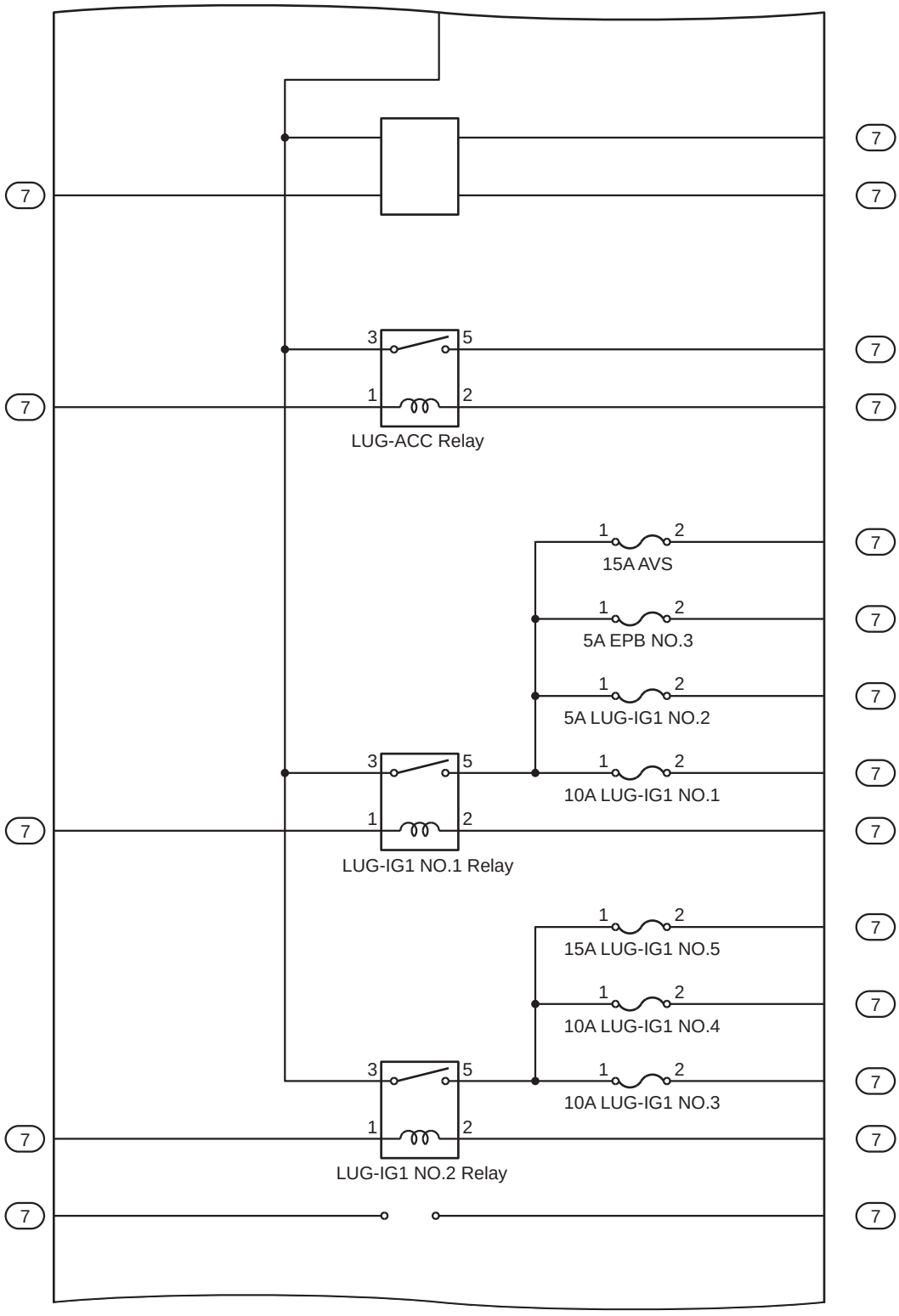

(Cont. Next Page)

[Luggage Room R/B No. 2 and Luggage Room J/B No. 2 Inner Circuit]

(Cont'd)

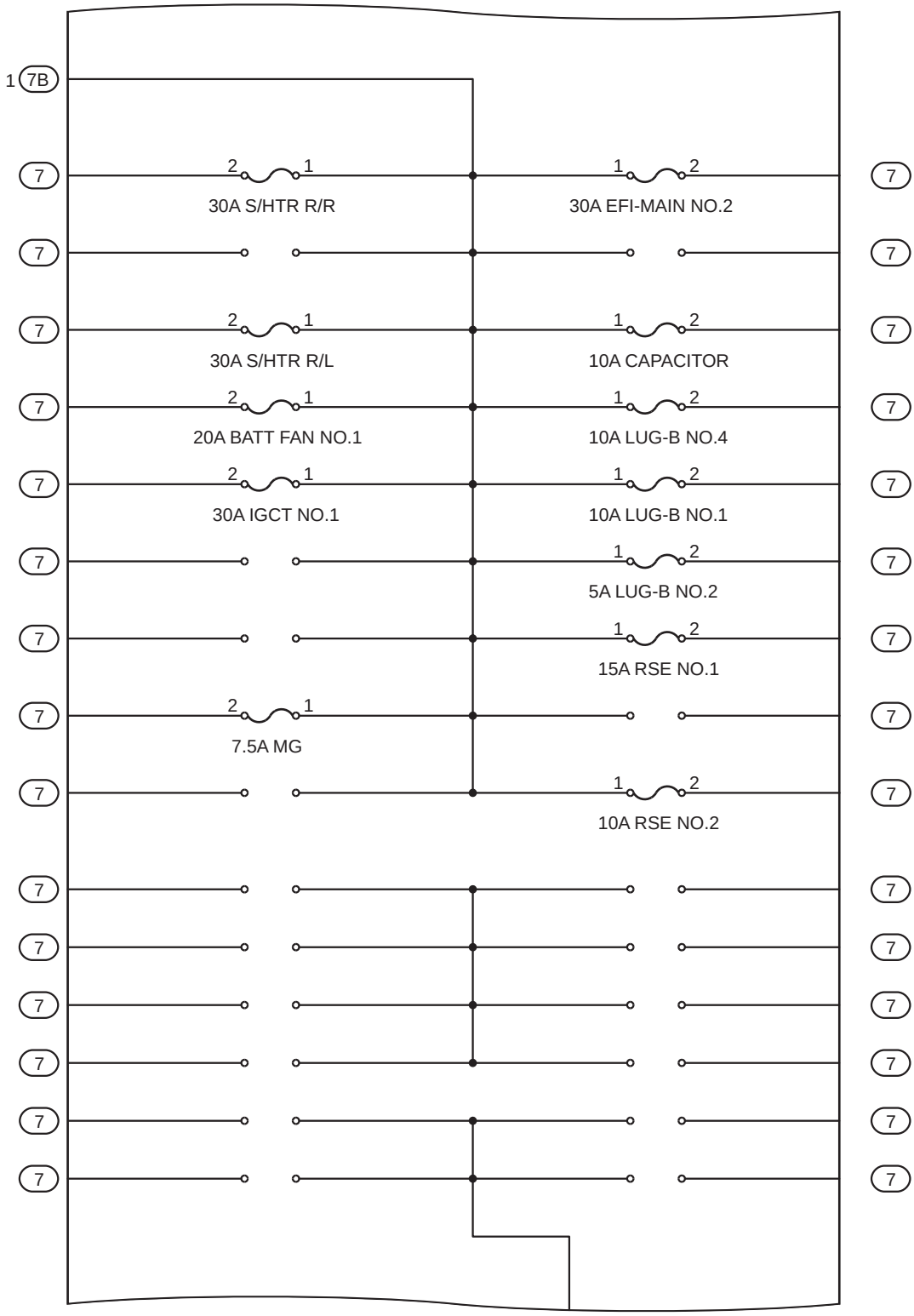

(Cont. Next Page)

[Luggage Room R/B No. 2 and Luggage Room J/B No. 2 Inner Circuit]

(Cont'd)

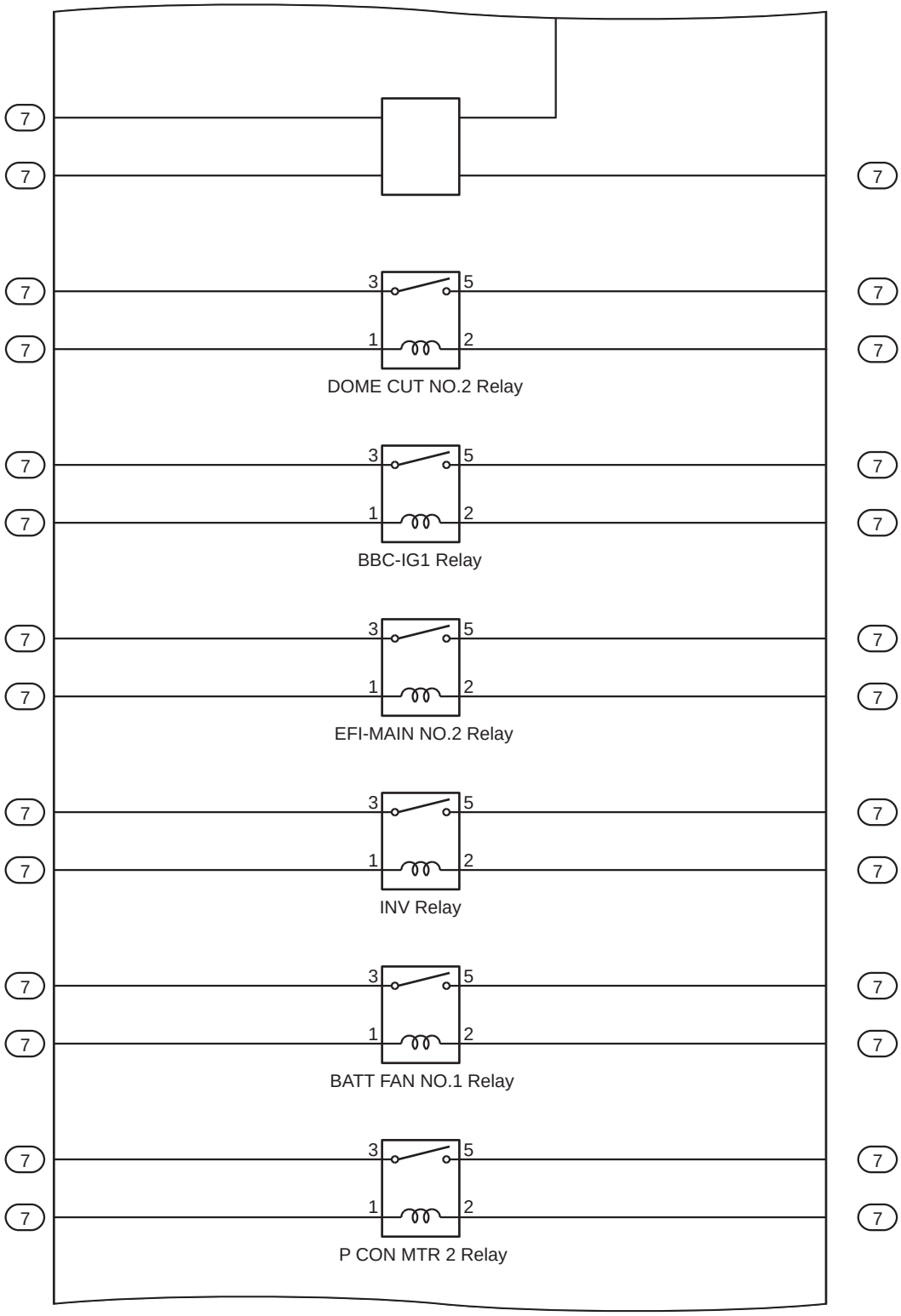

(Cont. Next Page)

[Luggage Room R/B No. 2 and Luggage Room J/B No. 2 Inner Circuit]

(Cont'd)

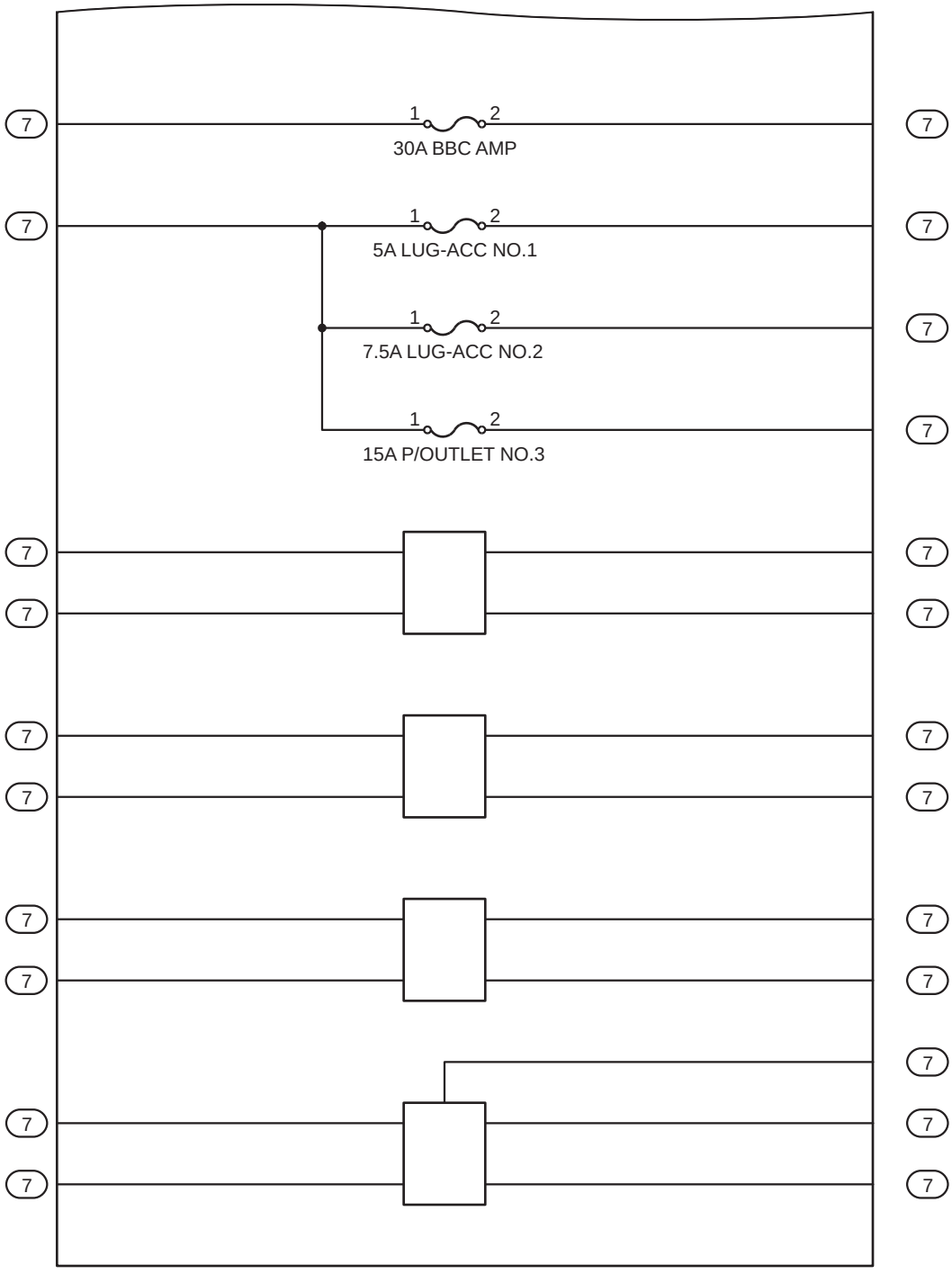
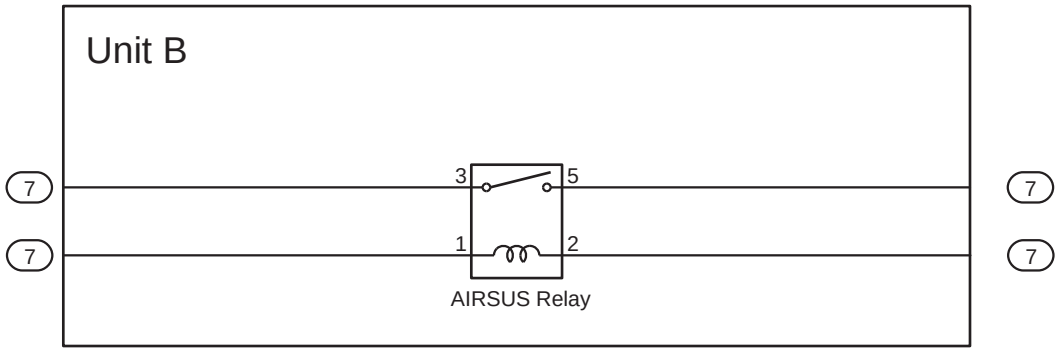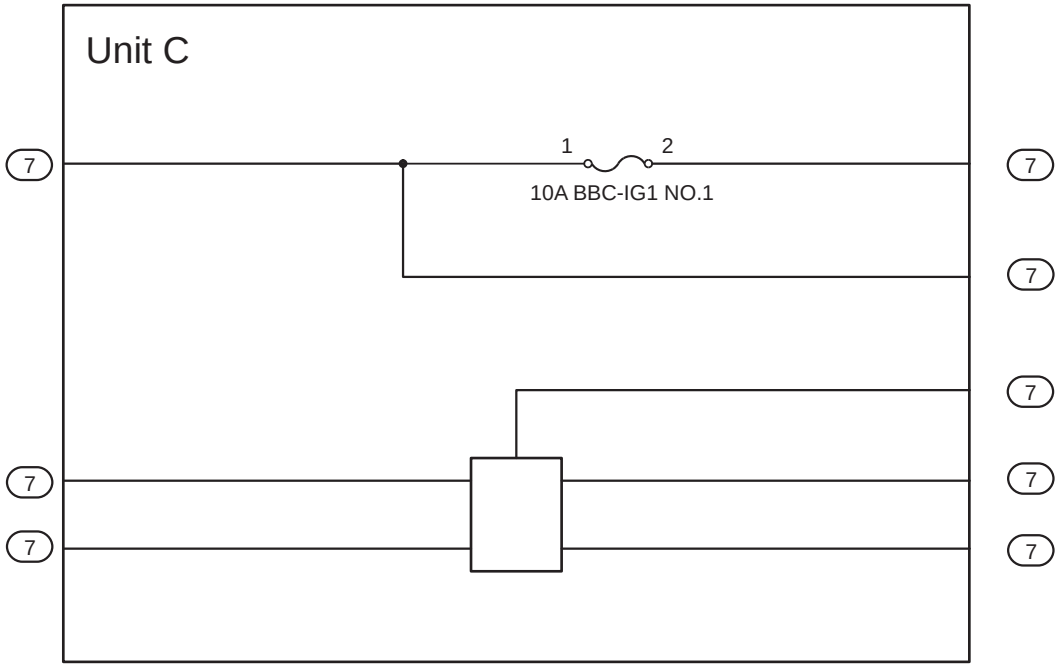
[Luggage Room R/B No. 2 and Luggage Room J/B No. 2 Inner Circuit]