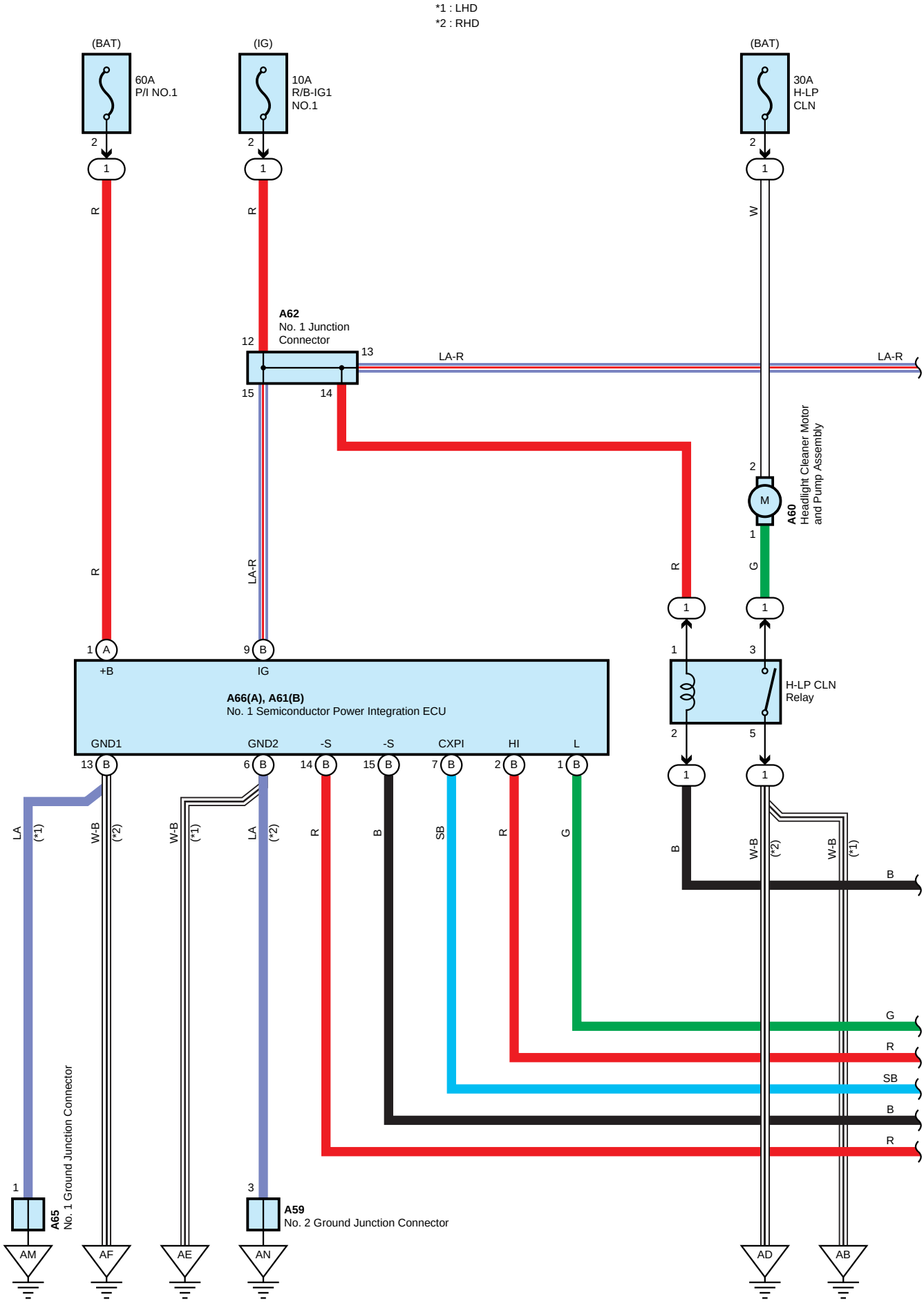
*1 : LHD
*2 : RHD
(BAT)
60A
P/I NO.1
(IG)
10A
R/B-IG1
NO.1
(BAT)
30A
H-LP
CLN
A62
No. 1 Junction
Connector
LA-R
LA-R
A60
Headlight Cleaner Motor
and Pump Assembly
H-LP CLN
Relay
+B
IG
A66(A), A61(B)
No. 1 Semiconductor Power Integration ECU
GND1
GND2
-S
-S
CXPI
HI
L
A65
No. 1 Ground Junction Connector
A59
No. 2 Ground Junction Connector
AM
AF
AE
AN
AD
AB

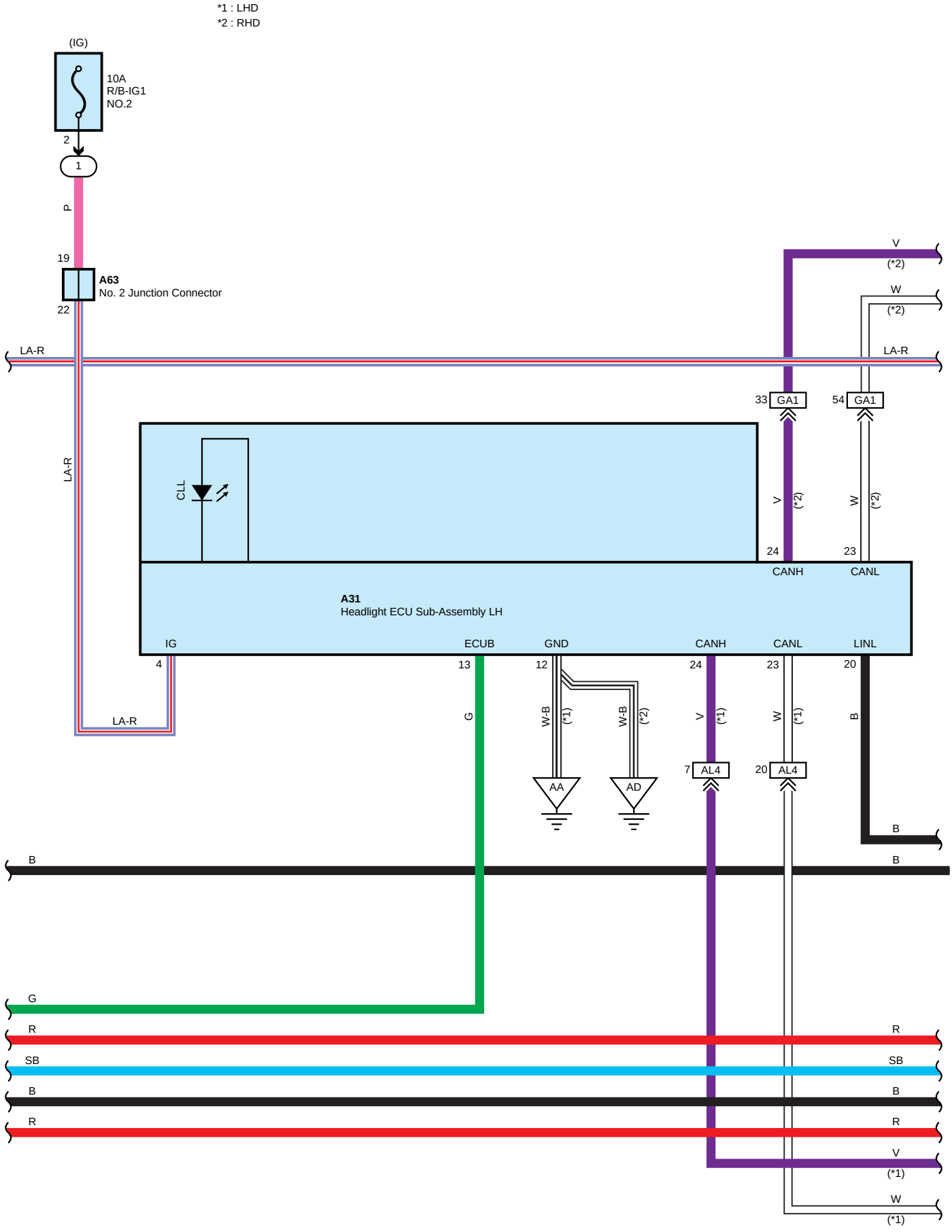
*1 : LHD
*2 : RHD
(IG)
10A
R/B-IG1
NO.2
2
1
P
19
A63
No. 2 Junction Connector
22
LA-R
LA-R
LA-R
V
(*2)
W
(*2)
LA-R
33 GA1
54 GA1
CLL
V
(*2)
W
(*2)
24
23
CANH
CANL
A31
Headlight ECU Sub-Assembly LH
IG
ECUB
GND
CANH
CANL
LINL
4
13
12
24
23
20
LA-R
G
W-B
(*1)
W-B
(*2)
V
(*1)
W
(*1)
B
7 AL4
20 AL4
AA
AD
B
B
B
G
R
R
SB
SB
B
B
R
R
V
(*1)
W
(*1)

*1 : LHD
*2 : RHD

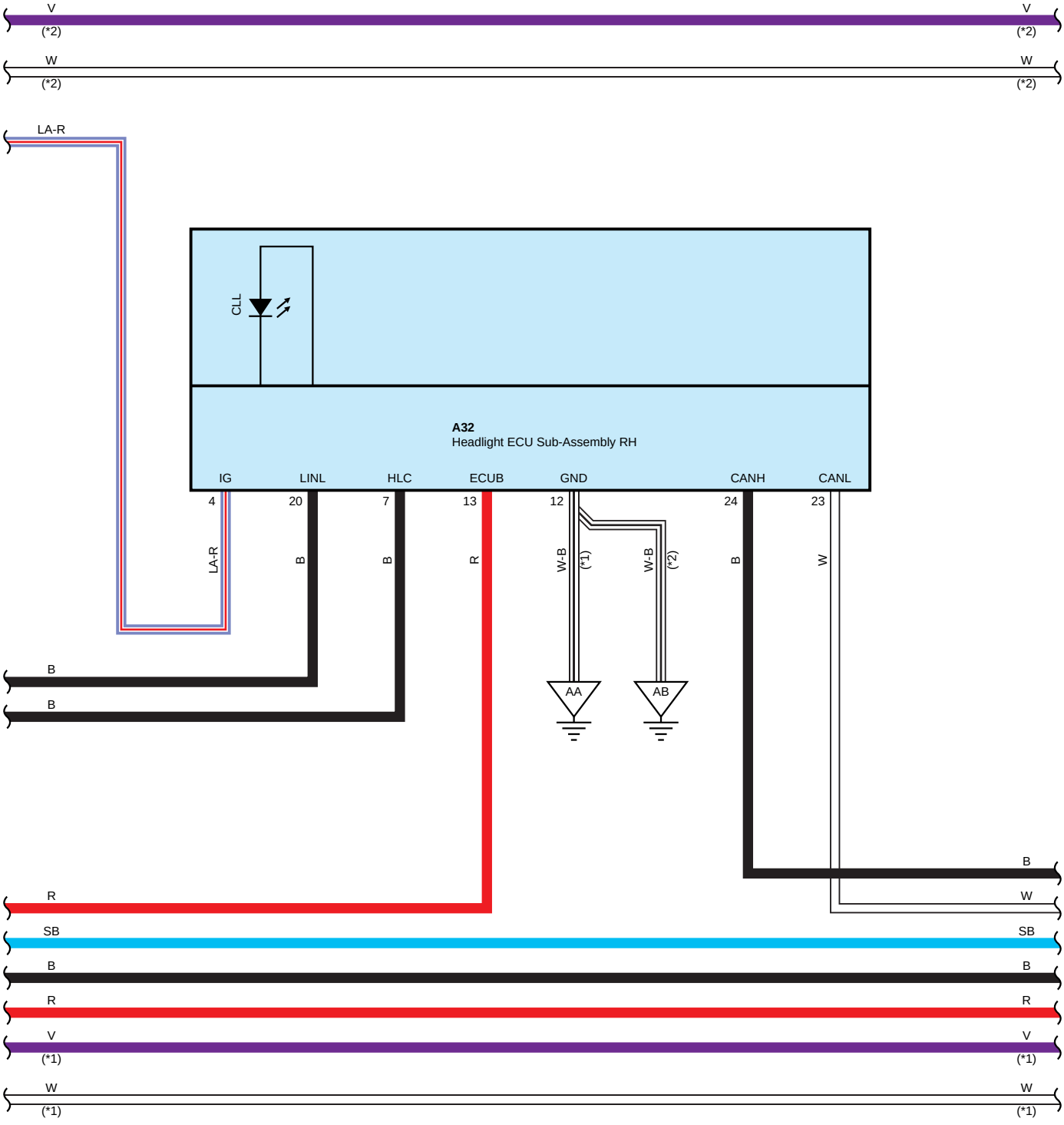
V
(*2)
V
(*2)
W
(*2)
W
(*2)
LA-R
CLL
A32
Headlight ECU Sub-Assembly RH
IG
LINL
HLC
ECUB
GND
CANH
CANL
4
20
7
13
12
24
23
LA-R
B
B
R
W-B
(*1)
W-B
(*2)
B
W
B
B
AA
AB
B
R
W
SB
SB
B
B
R
R
V
(*1)
V
(*1)
W
(*1)
W
(*1)

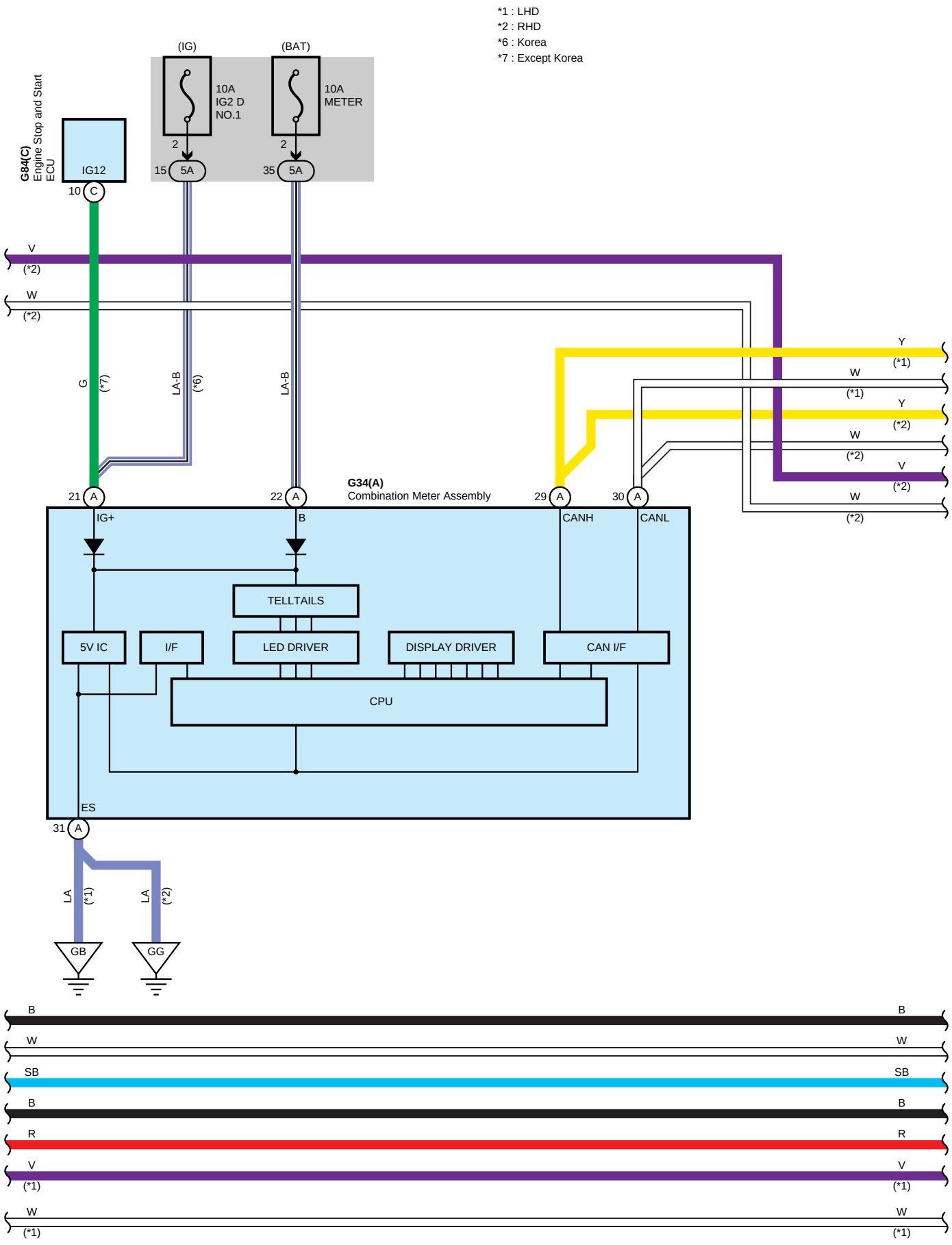
*1 : LHD
*2 : RHD
*6 : Korea
*7 : Except Korea
(IG)
(BAT)
10A
IG2 D
NO.1
10A
METER
2
2
15
5A
35
5A
G84(C)
Engine Stop and Start
ECU
IG12
10
C
V
(*2)
W
(*2)
G
(*7)
LA-B
(*6)
LA-B
Y
(*1)
W
(*1)
Y
(*2)
W
(*2)
V
(*2)
W
(*2)
G34(A)
Combination Meter Assembly
21
A
22
A
29
A
30
A
IG+
B
CANH
CANL
TELLTAILS
5V IC
I/F
LED DRIVER
DISPLAY DRIVER
CAN I/F
CPU
ES
31
A
LA
(*1)
LA
(*2)
GB
GG
B
B
W
W
SB
SB
B
B
R
R
V
(*1)
V
(*1)
W
(*1)
W
(*1)

- 4 -

*1 : LHD
*2 : RHD

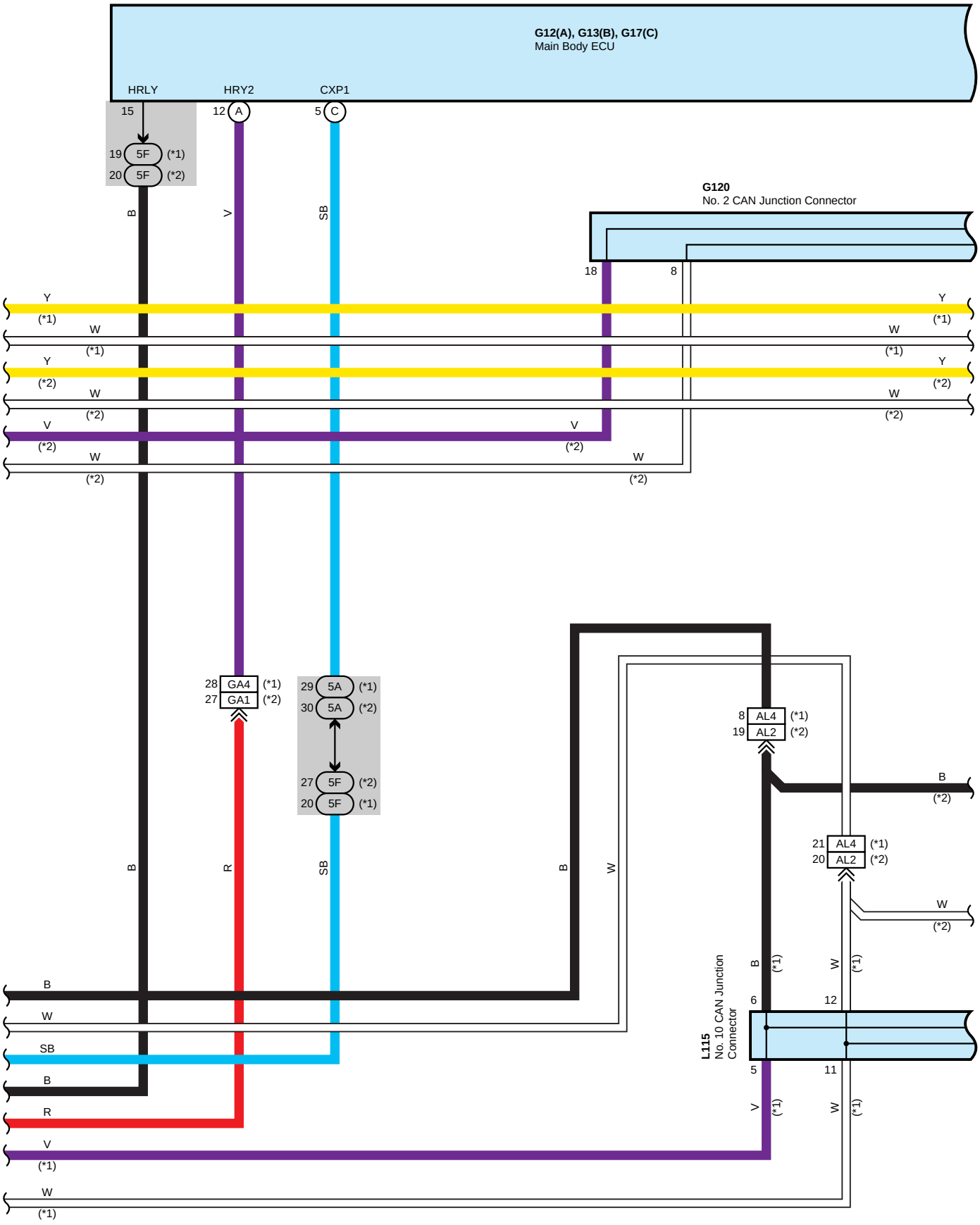
G12(A), G13(B), G17(C)
Main Body ECU
HRLY
HRY2
CXP1
15
12 A
5 C
19 5F (*1)
20 5F (*2)
B
V
SB
G120
No. 2 CAN Junction Connector
18
8
Y
(*1)
W
(*1)
Y
(*2)
W
(*2)
V
(*2)
W
(*2)
28 GA4 (*1)
27 GA1 (*2)
29 5A (*1)
30 5A (*2)
27 5F (*2)
20 5F (*1)
8 AL4 (*1)
19 AL2 (*2)
21 AL4 (*1)
20 AL2 (*2)
B
(*2)
W
(*2)
R
L115
No. 10 CAN Junction Connector
6
12
5
11
(*1)

*1 : LHD
*2 : RHD

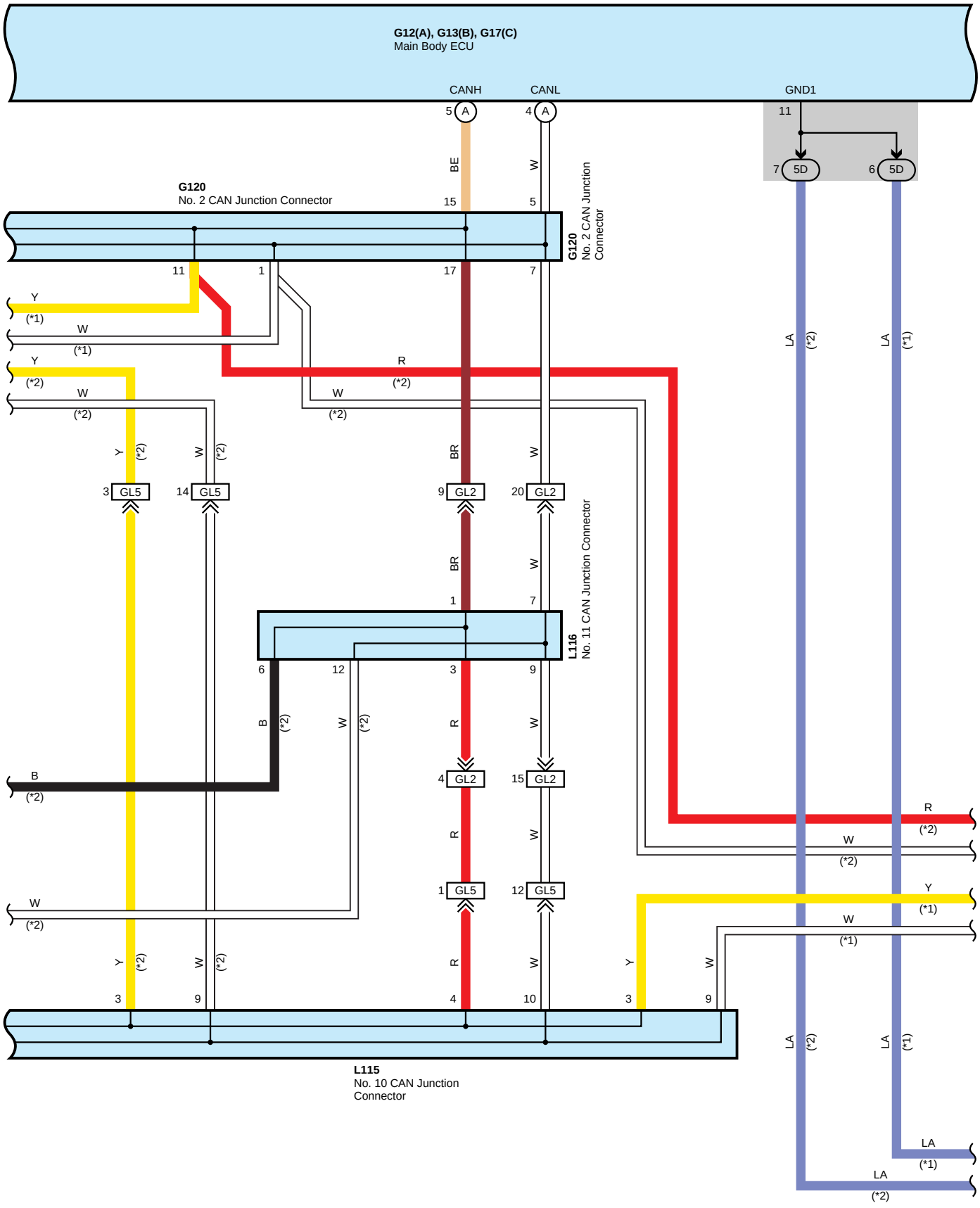
G12(A), G13(B), G17(C)
Main Body ECU
CANH
CANL
GND1
G120
No. 2 CAN Junction Connector
L116
No. 11 CAN Junction Connector
L115
No. 10 CAN Junction Connector
GL5
GL2
5D

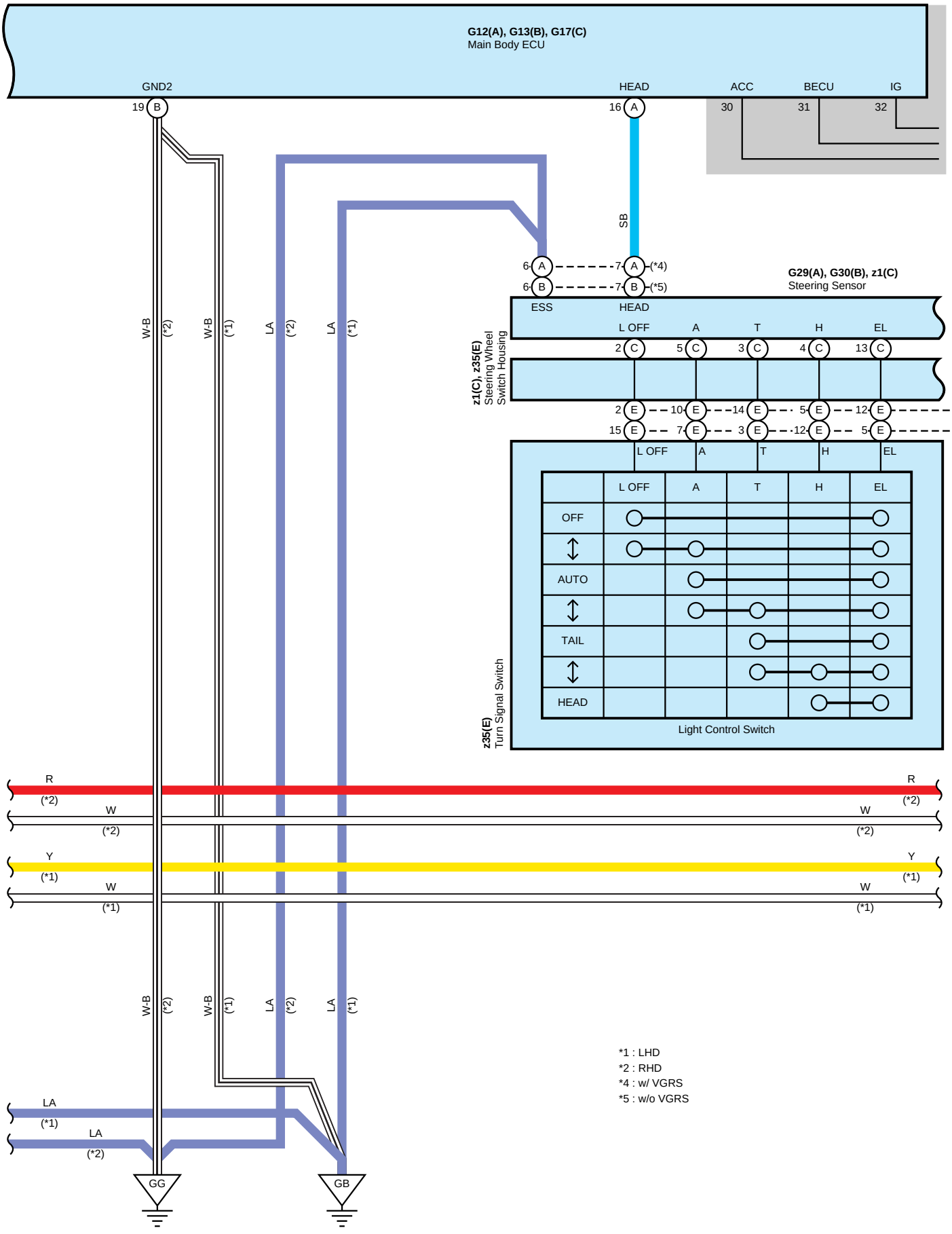
G12(A), G13(B), G17(C)
Main Body ECU
GND2
HEAD
ACC
BECU
IG
19 B
16 A
30
31
32
SB
6 A
7 A (*4)
6 B
7 B (*5)
G29(A), G30(B), z1(C)
Steering Sensor
ESS
HEAD
L OFF
A
T
H
EL
z1(C), z35(E)
Steering Wheel
Switch Housing
2 C
5 C
3 C
4 C
13 C
2 E
10 E
14 E
5 E
12 E
15 E
7 E
3 E
12 E
5 E
OFF
AUTO
TAIL
HEAD
Light Control Switch
z35(E)
Turn Signal Switch
W-B
(*2)
W-B
(*1)
LA
(*2)
LA
(*1)
R
(*2)
W
(*2)
Y
(*1)
W
(*1)
LA
(*1)
LA
(*2)
GG
GB
*1 : LHD
*2 : RHD
*4 : w/ VGRS
*5 : w/o VGRS

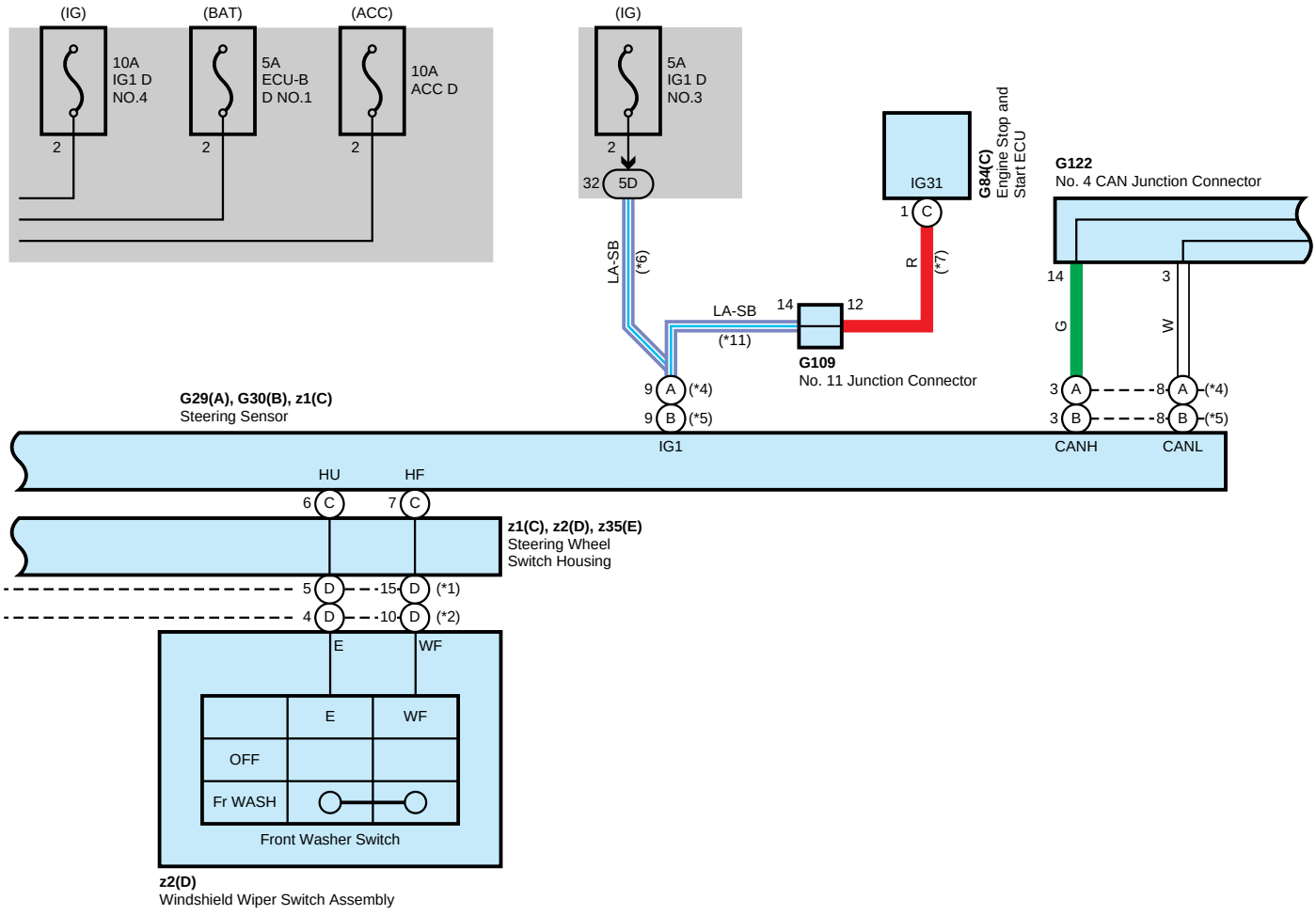

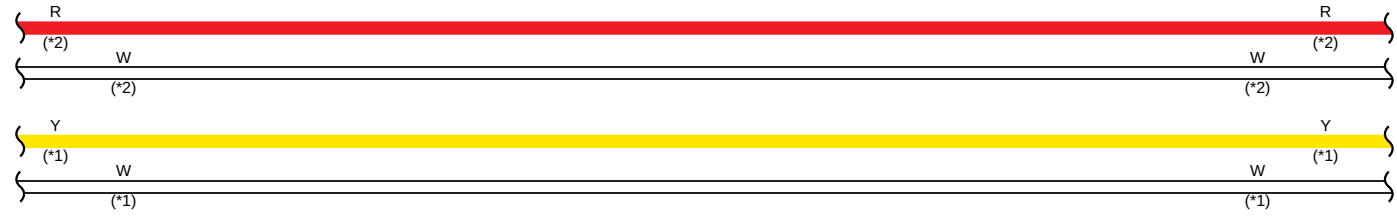

*1 : LHD
*2 : RHD
*4 : w/ VGRS
*5 : w/o VGRS
*6 : Korea
*7 : Except Korea

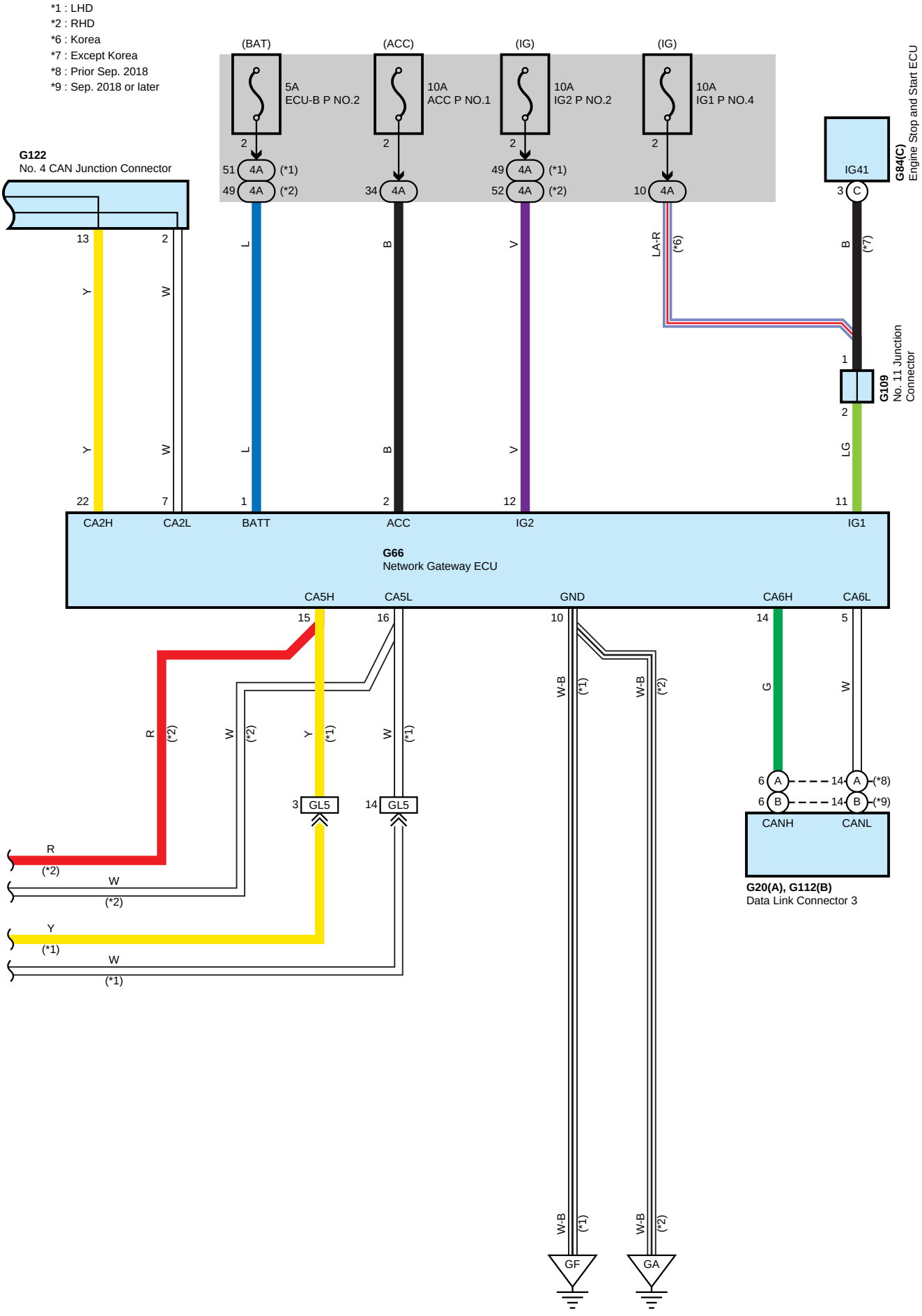
*1 : LHD
*2 : RHD
*6 : Korea
*7 : Except Korea
*8 : Prior Sep. 2018
*9 : Sep. 2018 or later
(BAT)
(ACC)
(IG)
(IG)
5A
ECU-B P NO.2
10A
ACC P NO.1
10A
IG2 P NO.2
10A
IG1 P NO.4
G122
No. 4 CAN Junction Connector
G84(C)
Engine Stop and Start ECU
IG41
G109
No. 11 Junction Connector
CA2H
CA2L
BATT
ACC
IG2
IG1
G66
Network Gateway ECU
CA5H
CA5L
GND
CA6H
CA6L
GL5
CANH
CANL
G20(A), G112(B)
Data Link Connector 3
GF
GA

A31
Gray

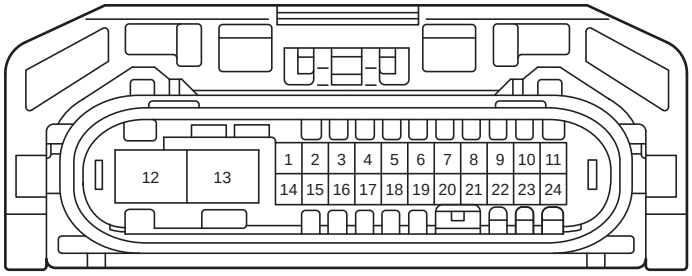

90980-12A92

A32
Gray

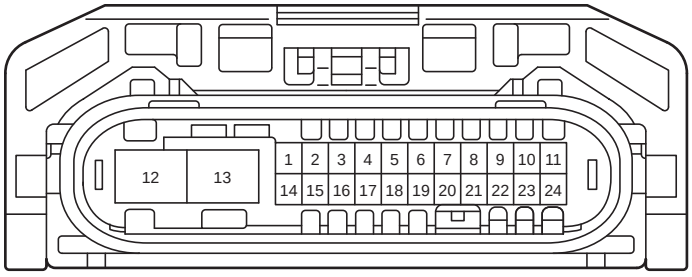

90980-12A92

A59
Black

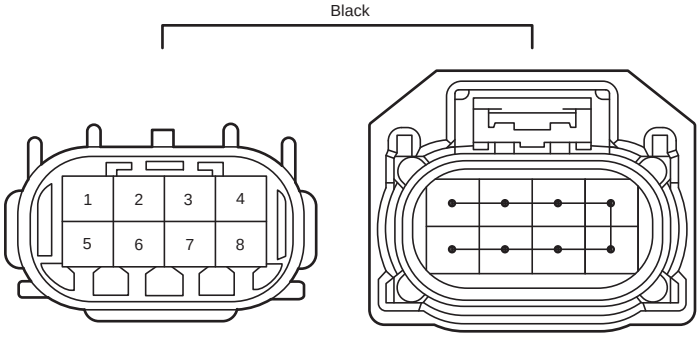

90980-12B56

A60
Gray

90980-10868

A61
Black

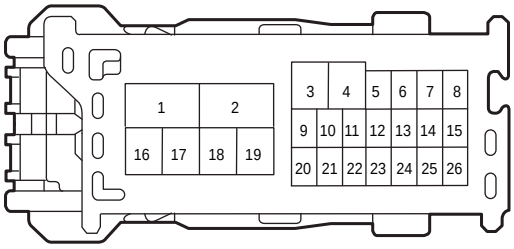

90980-12C41

A62
Black

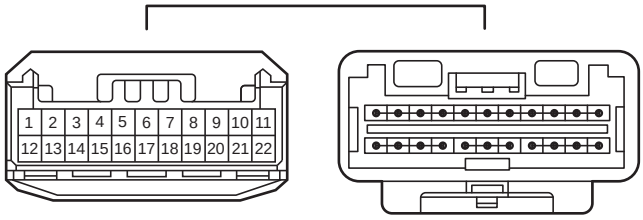

90980-12B54

A63
Black

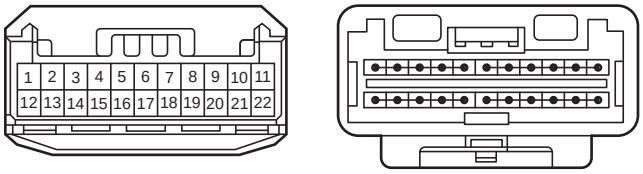

90980-12B54

A65
Black

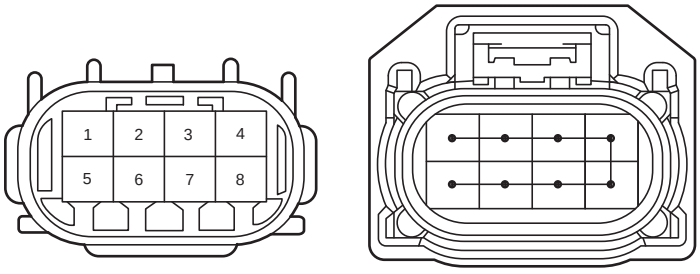

90980-12B56

A66
Black

90980-10995

G12
Black

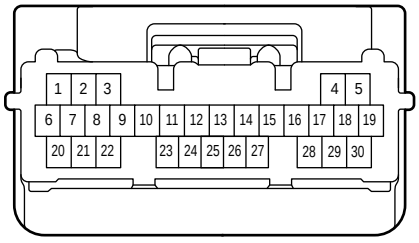

90980-12C62

G13
Black

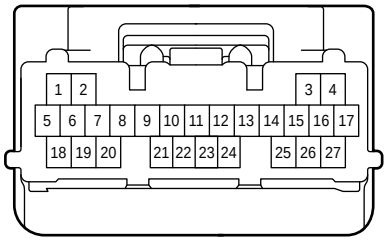

90980-12C63

G17
Black

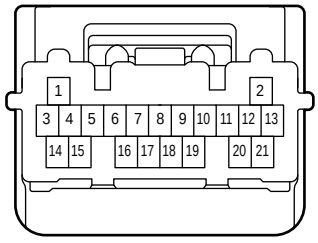

90980-12C61

G20
White

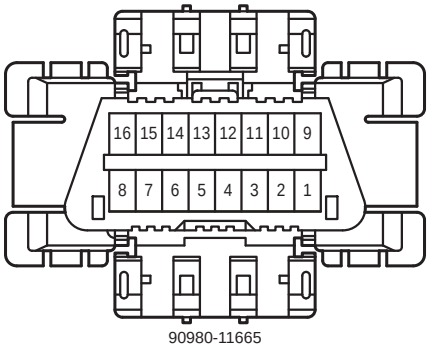

90980-11665

G29
Black

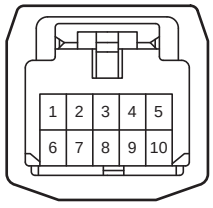

82824-78040

G30
White

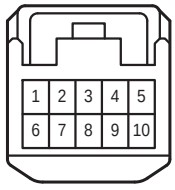

90980-12368

G34
Black

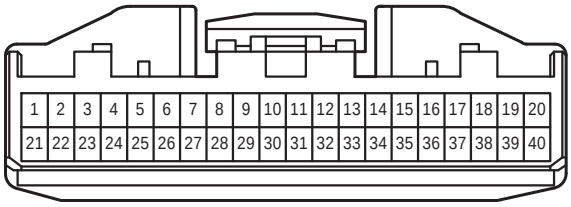

90980-12557

G66
Black

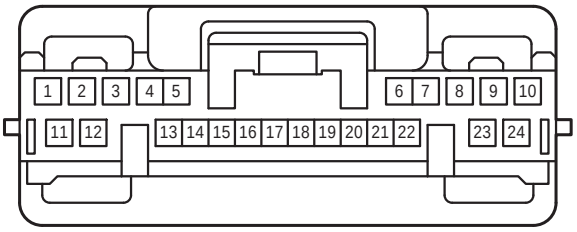

90980-12912

G84
Black

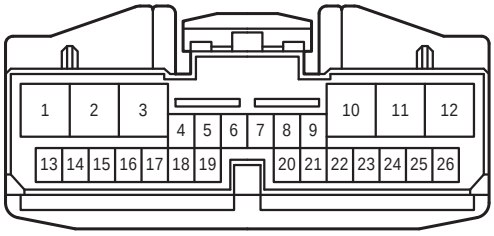

82824-12510

G109
Black

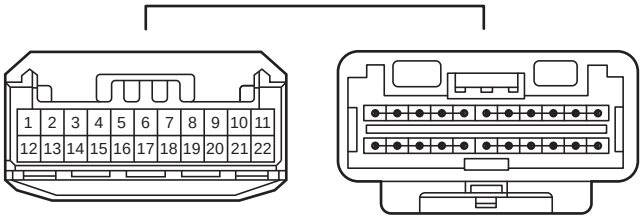

90980-12B54

G112
White

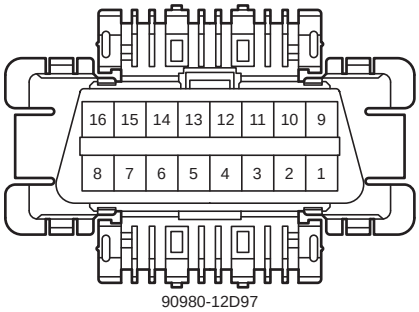

90980-12D97

G120
White

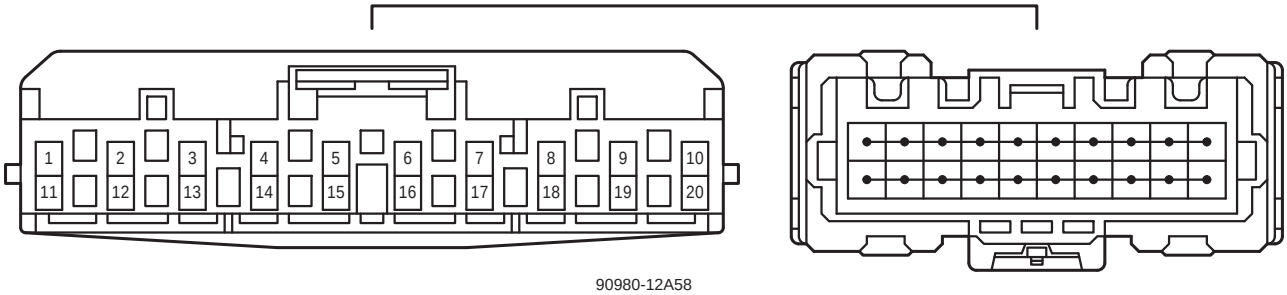

90980-12A58

G122
White

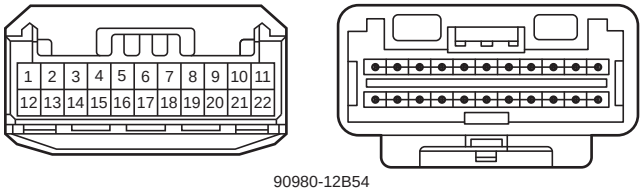

90980-12B54

L115
White

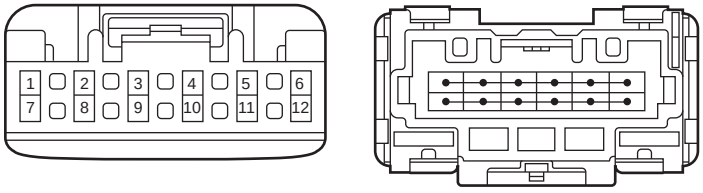

90980-12C68

L116
White

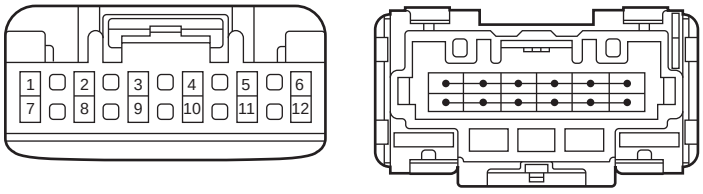

90980-12C68

z1
White

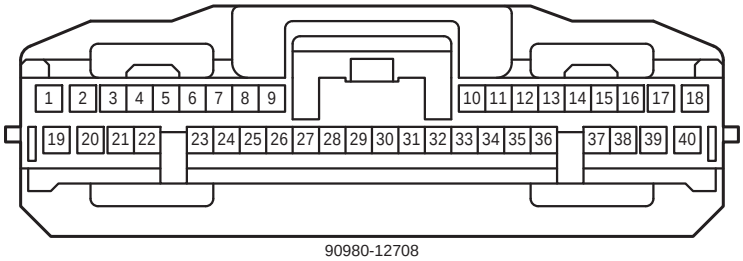

90980-12708

z2
White

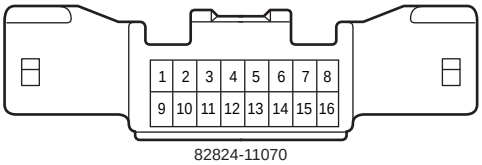

82824-11070

z35
White

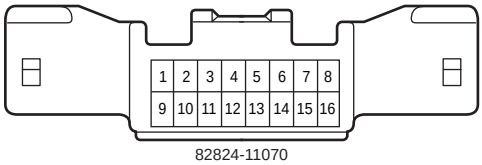

82824-11070

4A
White

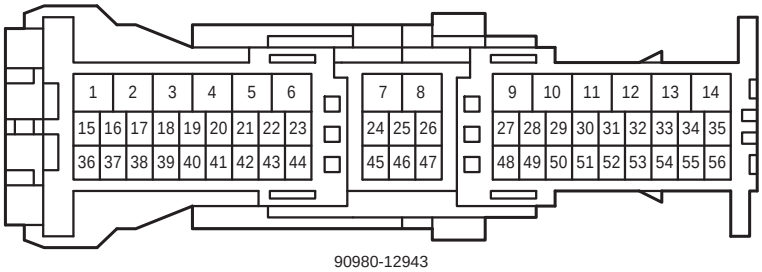

90980-12943

5A
White

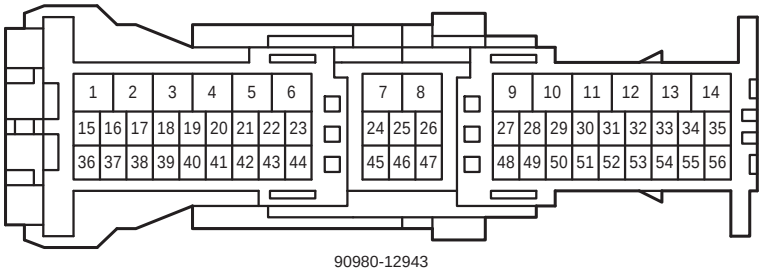

90980-12943

5D
White

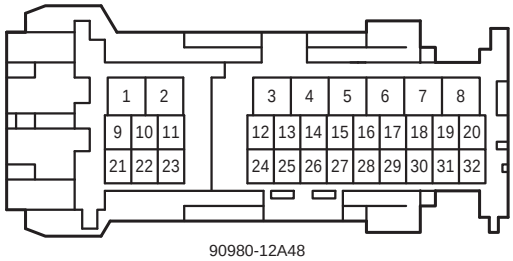

90980-12A48

5F
White

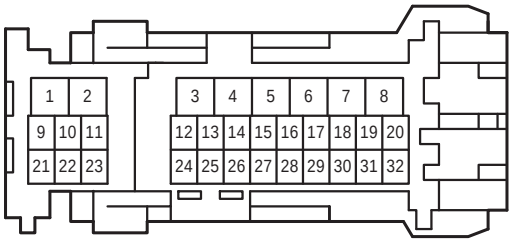

90980-12A47

AL2
White

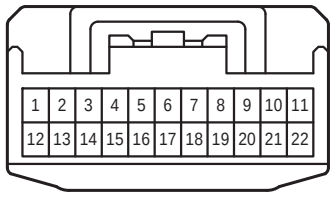

90980-12372

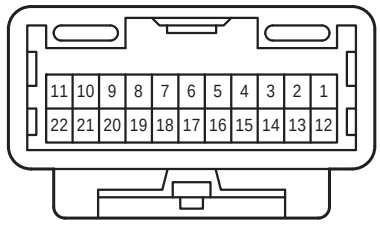

90980-12371

AL4
White

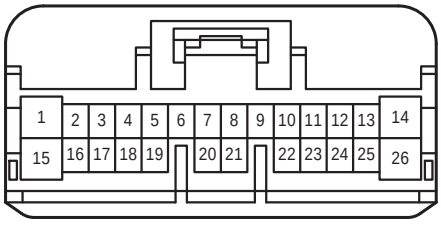

90980-12771

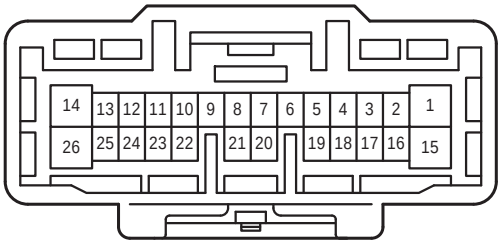

90980-12770

GA1
White

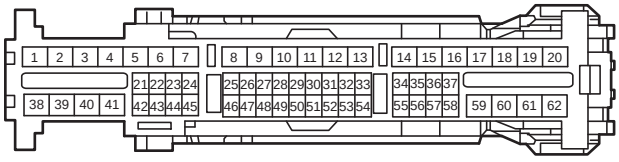

90980-12B22

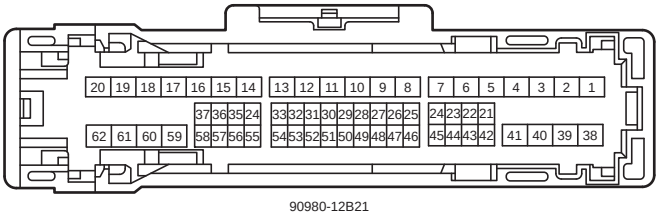

90980-12B21

GA4
White

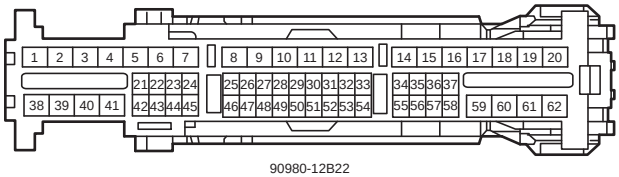

90980-12B22

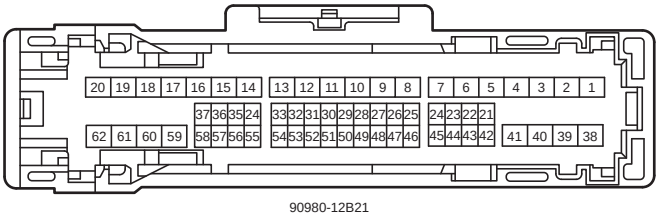

90980-12B21

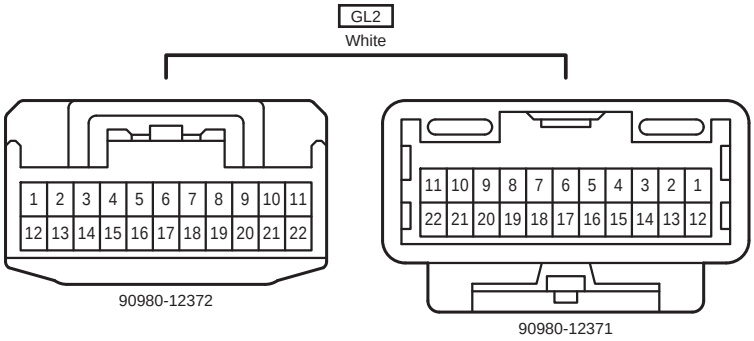
GL2
White
1 2 3 4 5 6 7 8 9 10 11
12 13 14 15 16 17 18 19 20 21 22
90980-12372
11 10 9 8 7 6 5 4 3 2 1
22 21 20 19 18 17 16 15 14 13 12
90980-12371

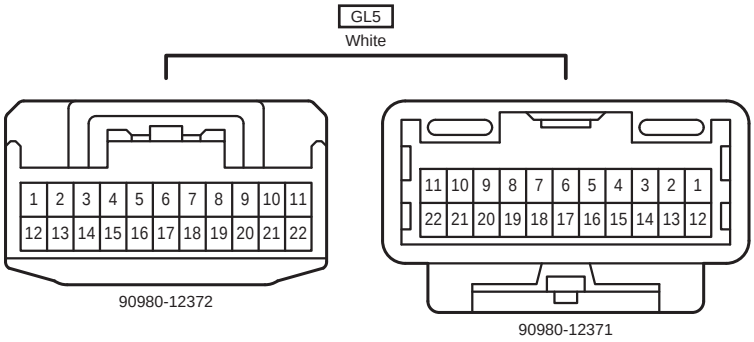
GL5
White
1 2 3 4 5 6 7 8 9 10 11
12 13 14 15 16 17 18 19 20 21 22
90980-12372
11 10 9 8 7 6 5 4 3 2 1
22 21 20 19 18 17 16 15 14 13 12
90980-12371