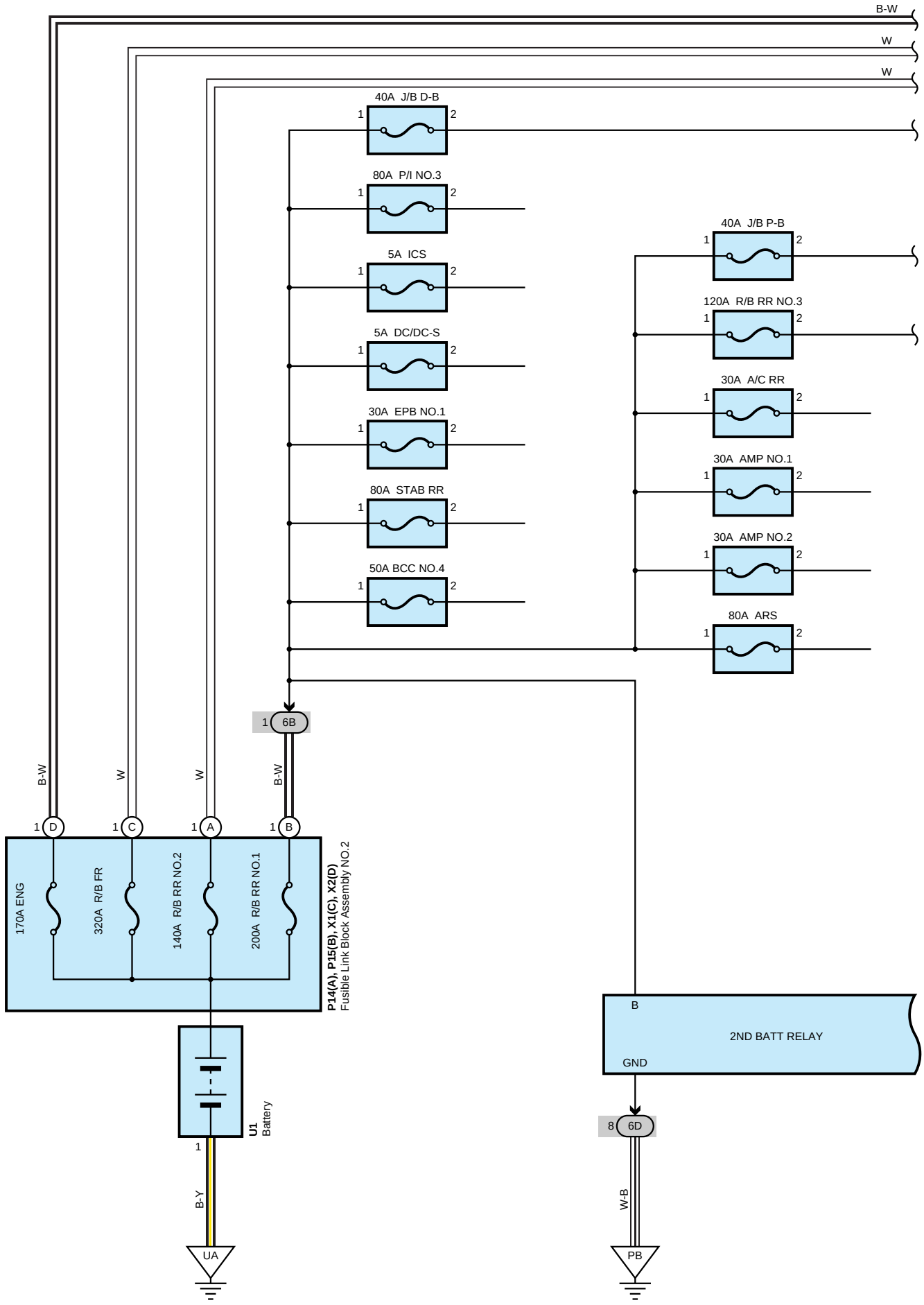
B-W
W
W
40A J/B D-B
80A P/I NO.3
5A ICS
5A DC/DC-S
30A EPB NO.1
80A STAB RR
50A BCC NO.4
40A J/B P-B
120A R/B RR NO.3
30A A/C RR
30A AMP NO.1
30A AMP NO.2
80A ARS
1
2
6B
B-W
W
W
B-W
D
C
A
B
170A ENG
320A R/B FR
140A R/B RR NO.2
200A R/B RR NO.1
P14(A), P15(B), X1(C), X2(D)
Fusible Link Block Assembly NO.2
U1
Battery
B-Y
UA
B
2ND BATT RELAY
GND
8
6D
W-B
PB

Power Source (8GR-FKS) (RHD)

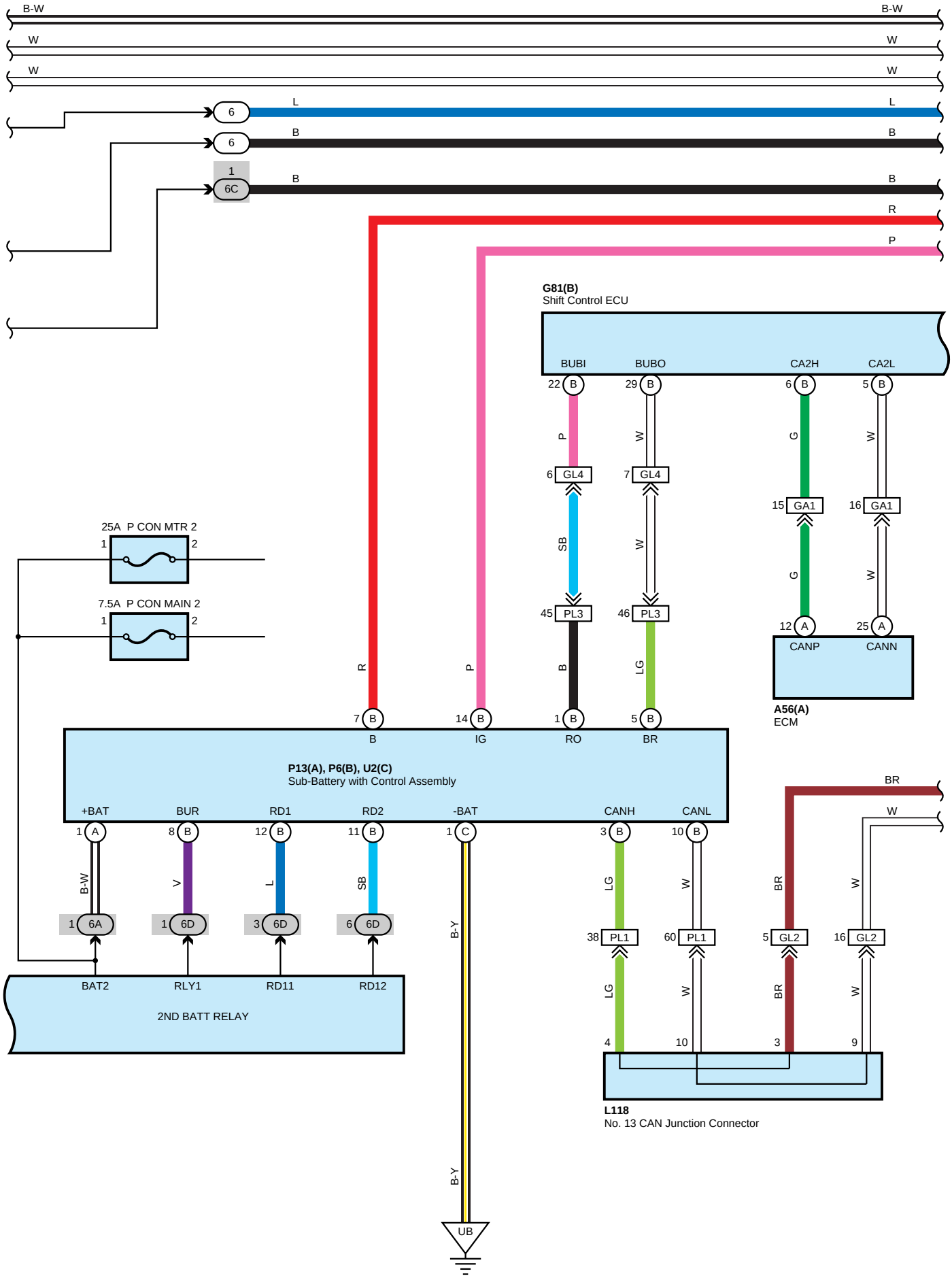

Power Source (8GR-FKS) (RHD)

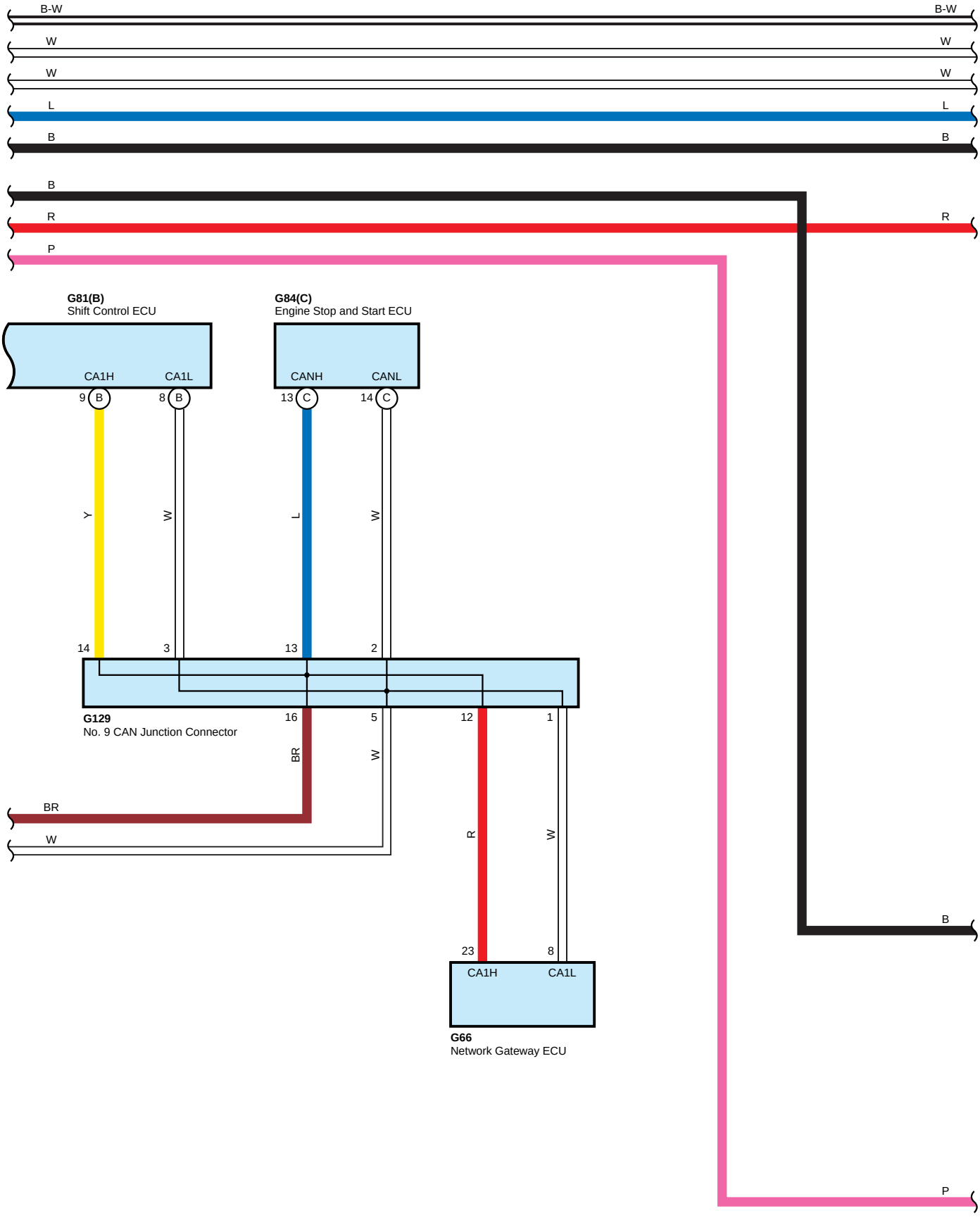

Power Source (8GR-FKS) (RHD)

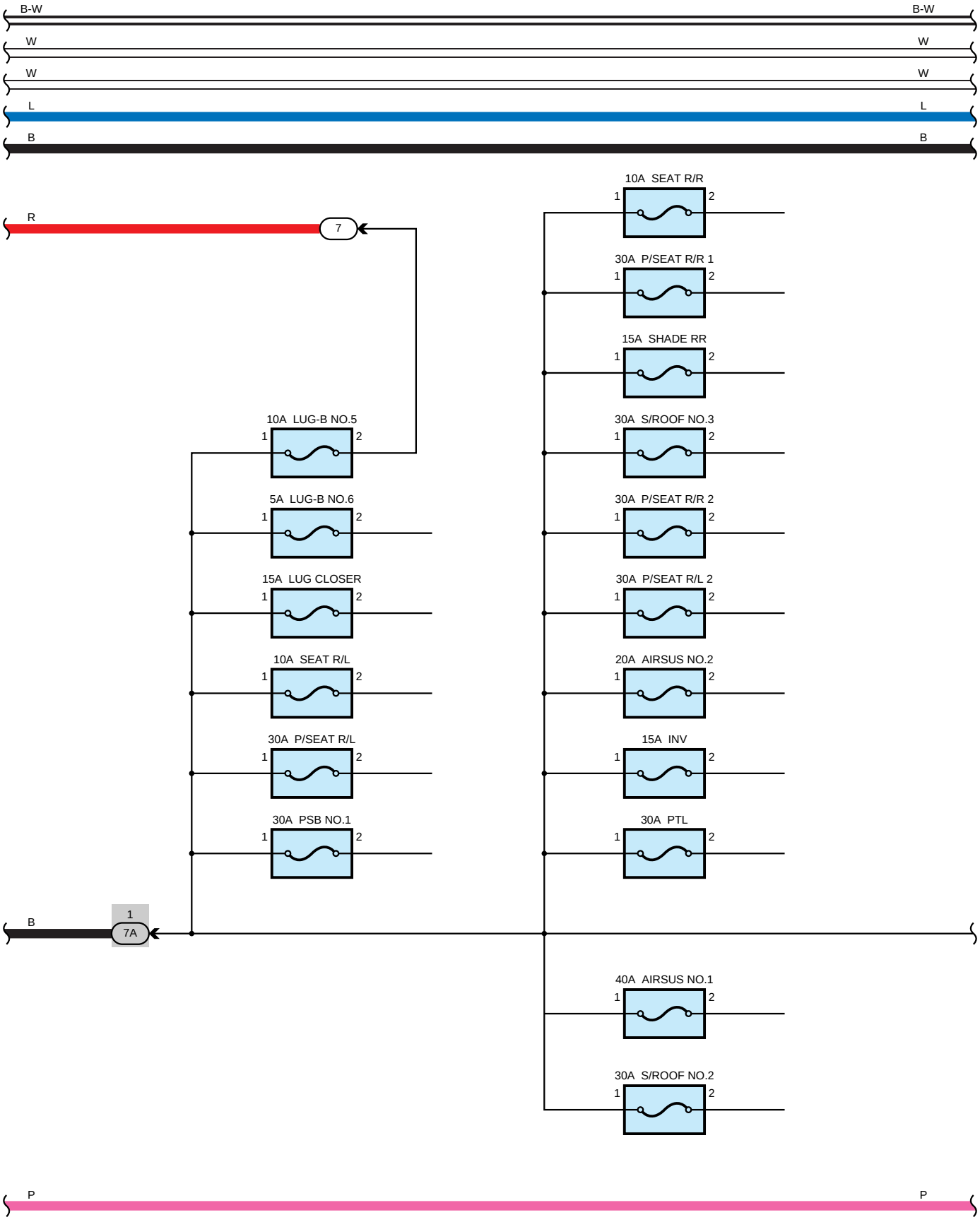

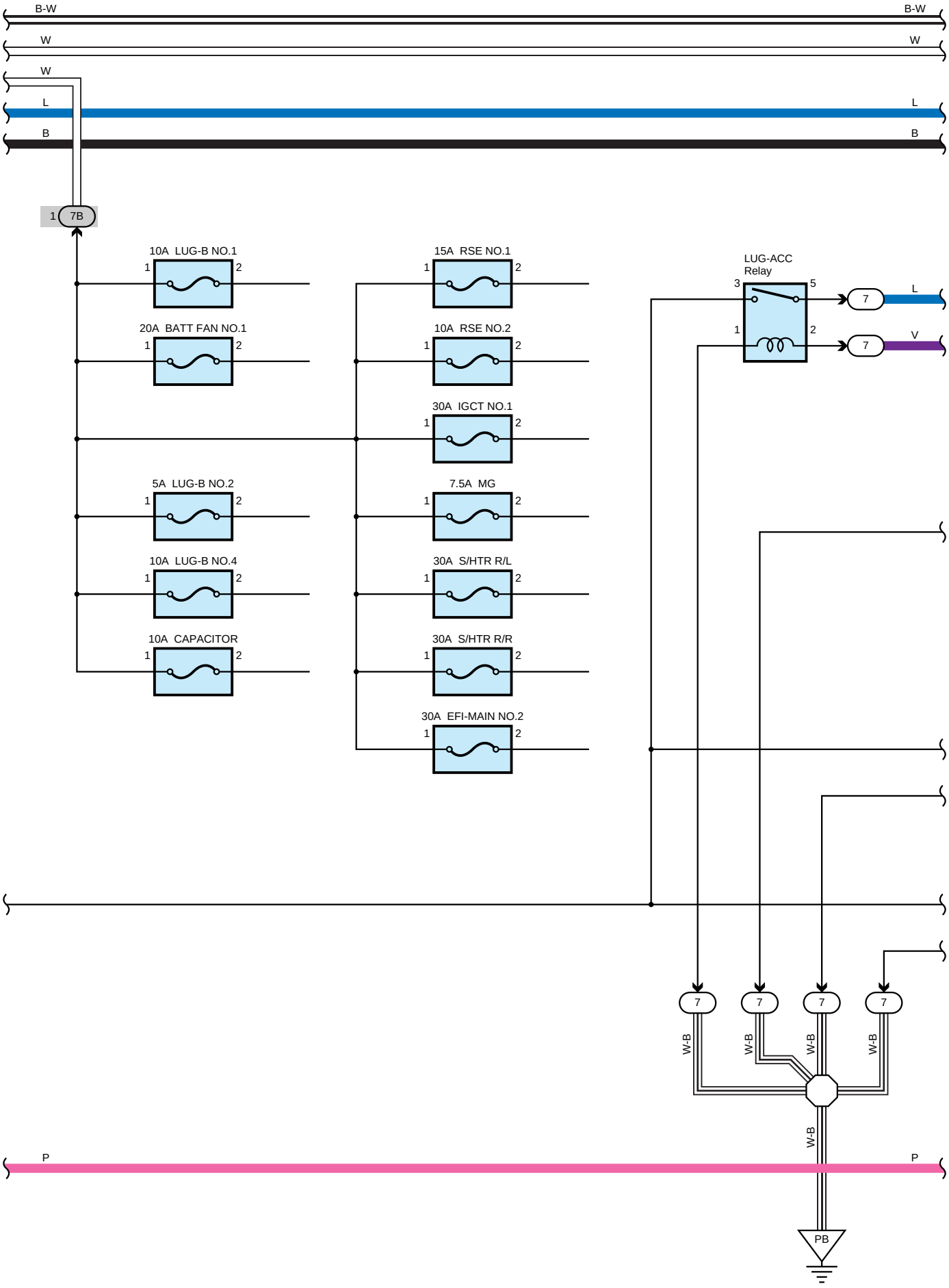
B-W
B-W
W
W
W
L
L
B
B
1 7B
10A LUG-B NO.1
20A BATT FAN NO.1
5A LUG-B NO.2
10A LUG-B NO.4
10A CAPACITOR
15A RSE NO.1
10A RSE NO.2
30A IGCT NO.1
7.5A MG
30A S/HTR R/L
30A S/HTR R/R
30A EFI-MAIN NO.2
LUG-ACC
Relay
3
5
1
2
7
L
V
W-B
P
PB

Power Source (8GR-FKS) (RHD)

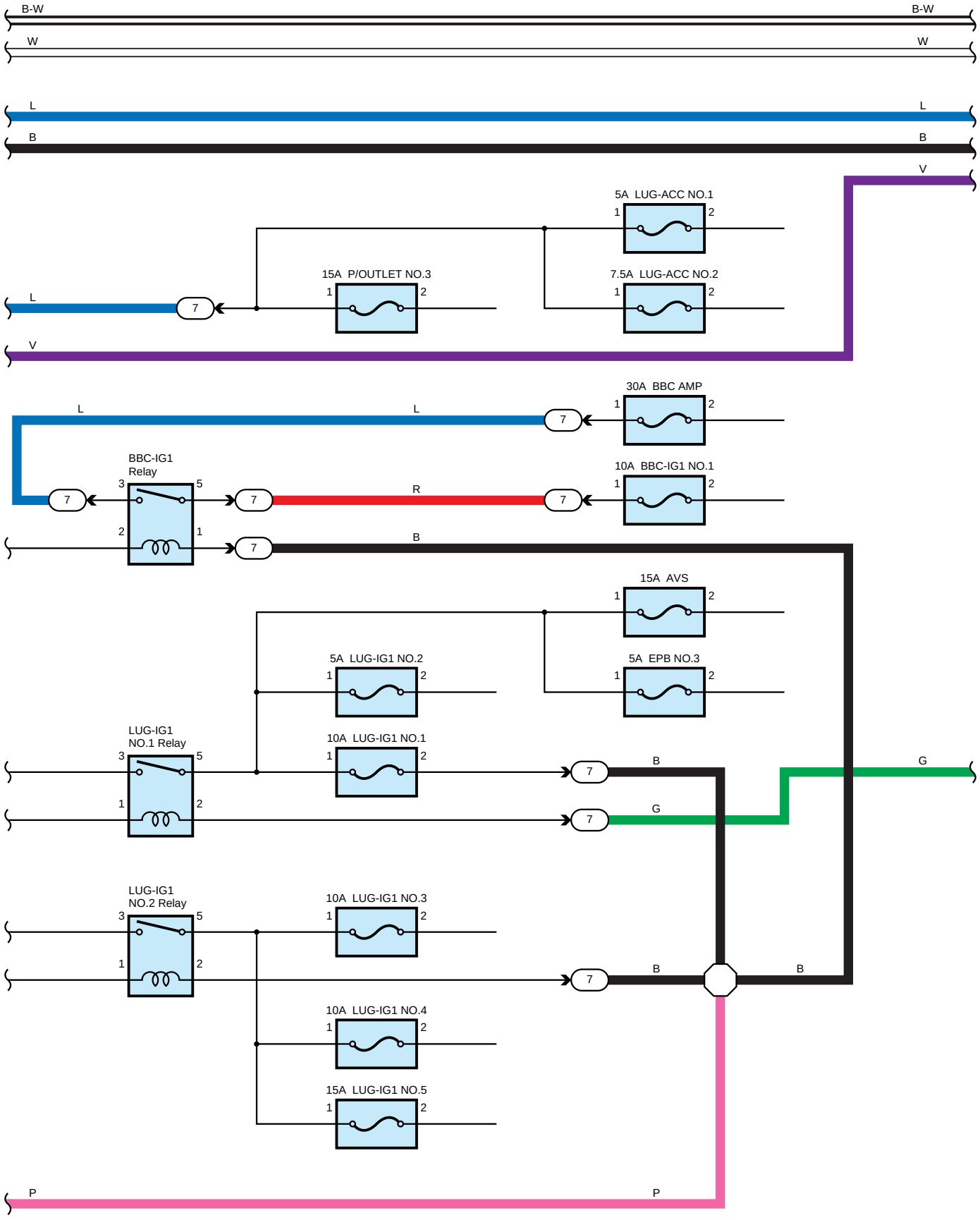

Power Source (8GR-FKS) (RHD)

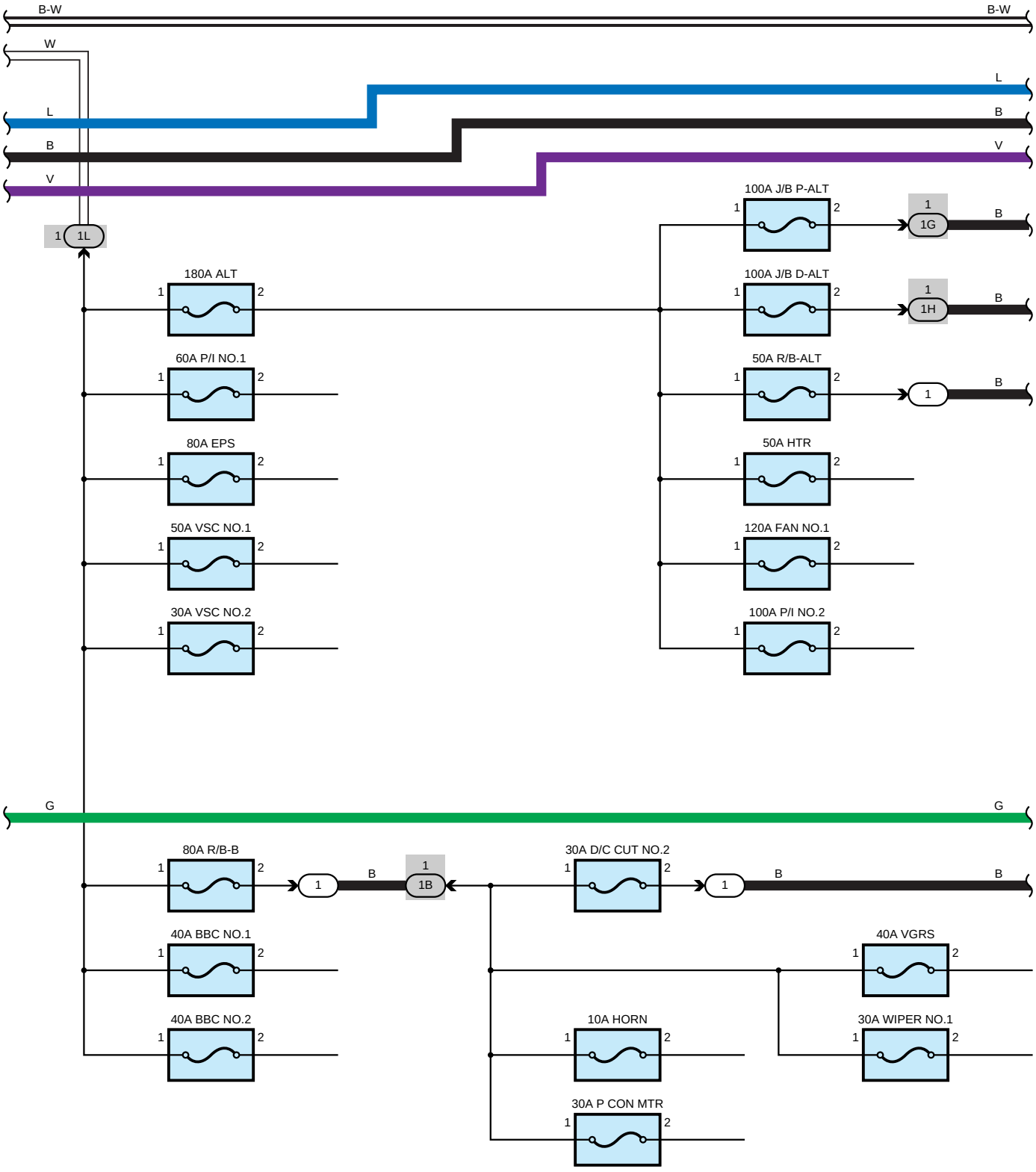

Power Source (8GR-FKS) (RHD)

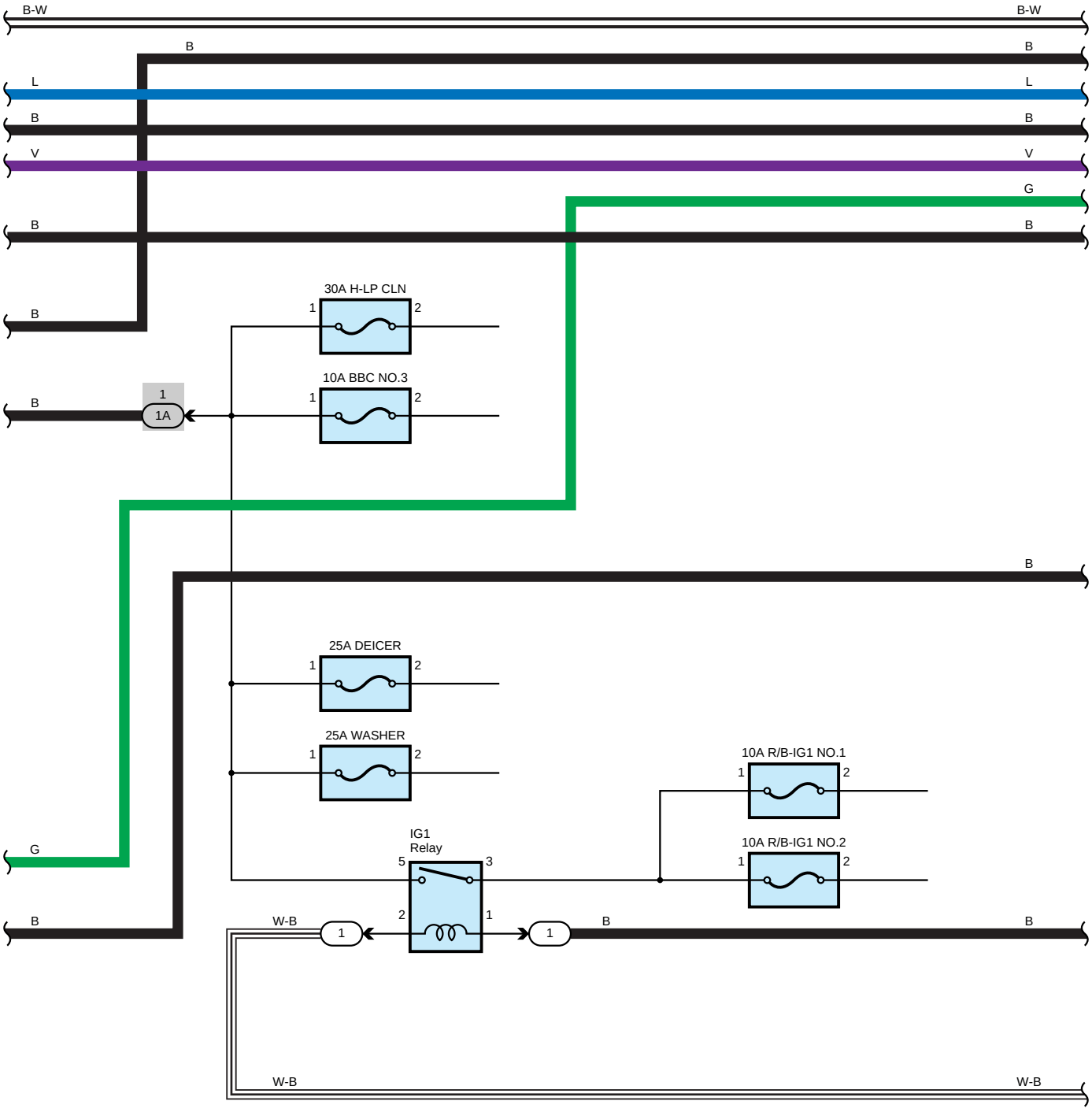

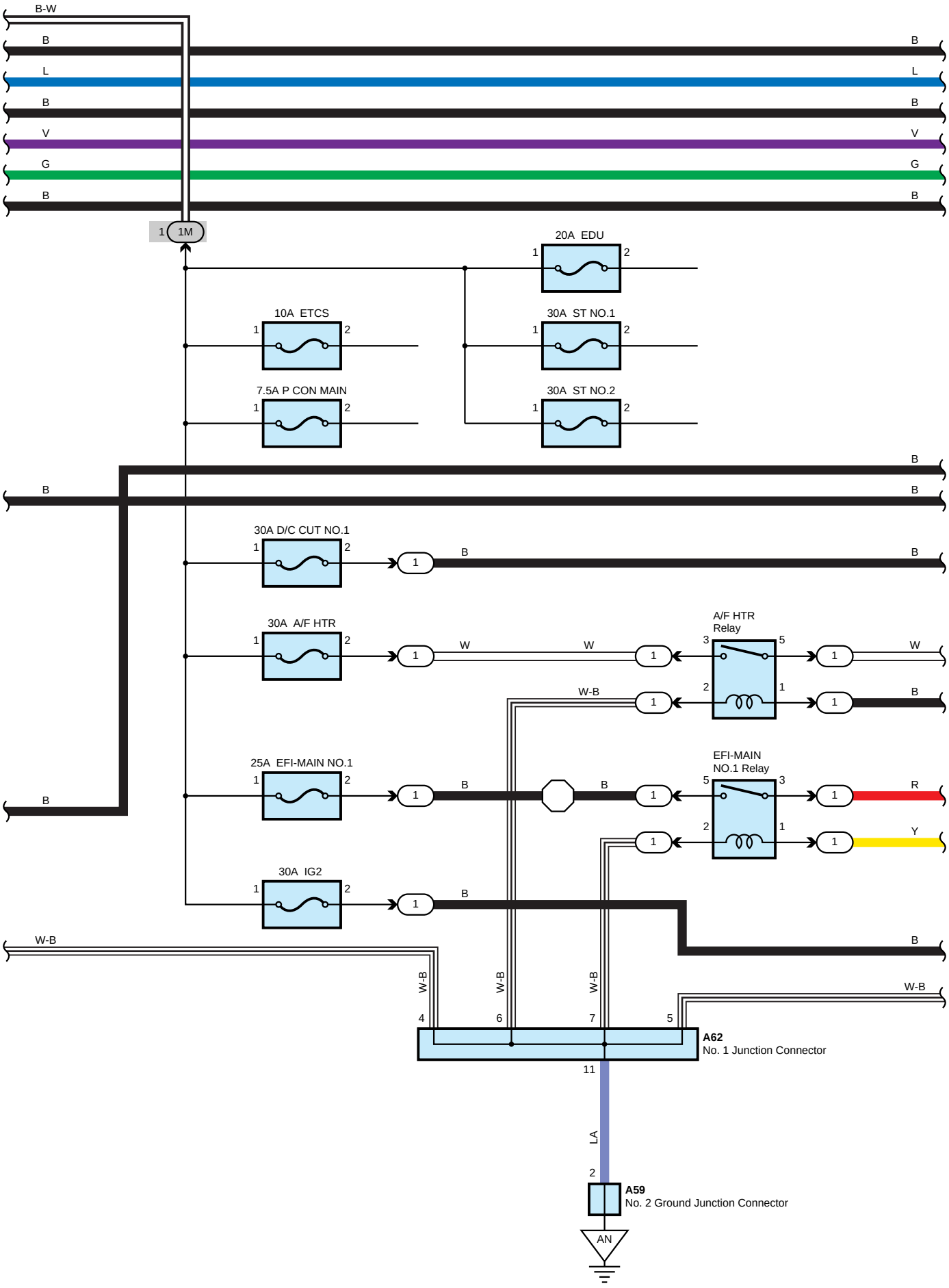
B-W
B
L
B
V
G
B
1M
20A EDU
10A ETCS
30A ST NO.1
7.5A P CON MAIN
30A ST NO.2
30A D/C CUT NO.1
30A A/F HTR
A/F HTR Relay
W
W-B
25A EFI-MAIN NO.1
EFI-MAIN NO.1 Relay
R
Y
30A IG2
A62
No. 1 Junction Connector
LA
A59
No. 2 Ground Junction Connector
AN

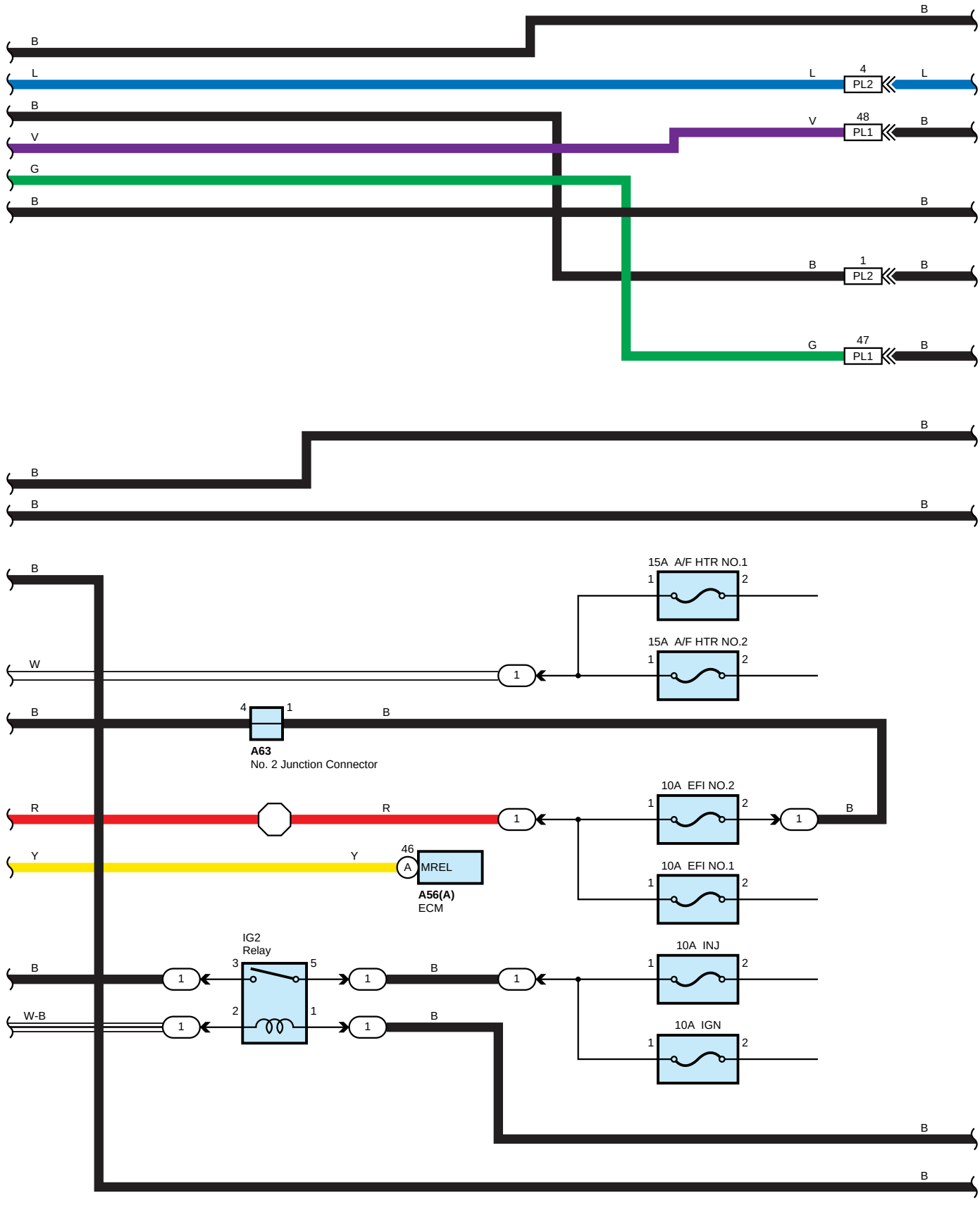
B
L
4
PL2
V
48
PL1
G
1
47
W
W-B
A63
No. 2 Junction Connector
R
Y
46
A
MREL
A56(A)
ECM
IG2
Relay
3
5
2
15A A/F HTR NO.1
15A A/F HTR NO.2
10A EFI NO.2
10A EFI NO.1
10A INJ
10A IGN

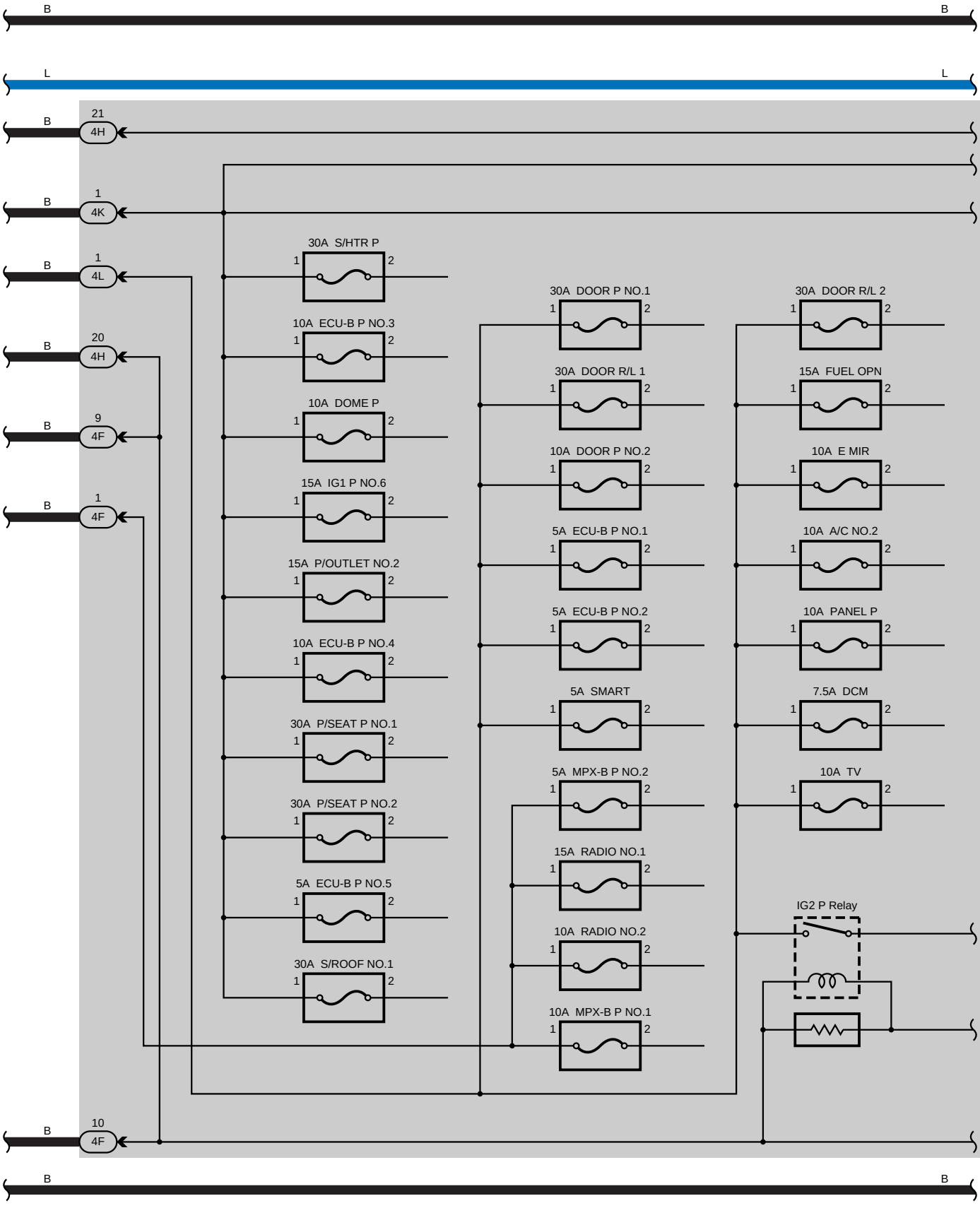
B
B
L
L
B
21
4H
B
1
4K
B
1
4L
B
20
4H
B
9
4F
B
1
4F
B
10
4F
30A S/HTR P
10A ECU-B P NO.3
10A DOME P
15A IG1 P NO.6
15A P/OUTLET NO.2
10A ECU-B P NO.4
30A P/SEAT P NO.1
30A P/SEAT P NO.2
5A ECU-B P NO.5
30A S/ROOF NO.1
30A DOOR P NO.1
30A DOOR R/L 1
10A DOOR P NO.2
5A ECU-B P NO.1
5A ECU-B P NO.2
5A SMART
5A MPX-B P NO.2
15A RADIO NO.1
10A RADIO NO.2
10A MPX-B P NO.1
30A DOOR R/L 2
15A FUEL OPN
10A E MIR
10A A/C NO.2
10A PANEL P
7.5A DCM
10A TV
IG2 P Relay
1
2

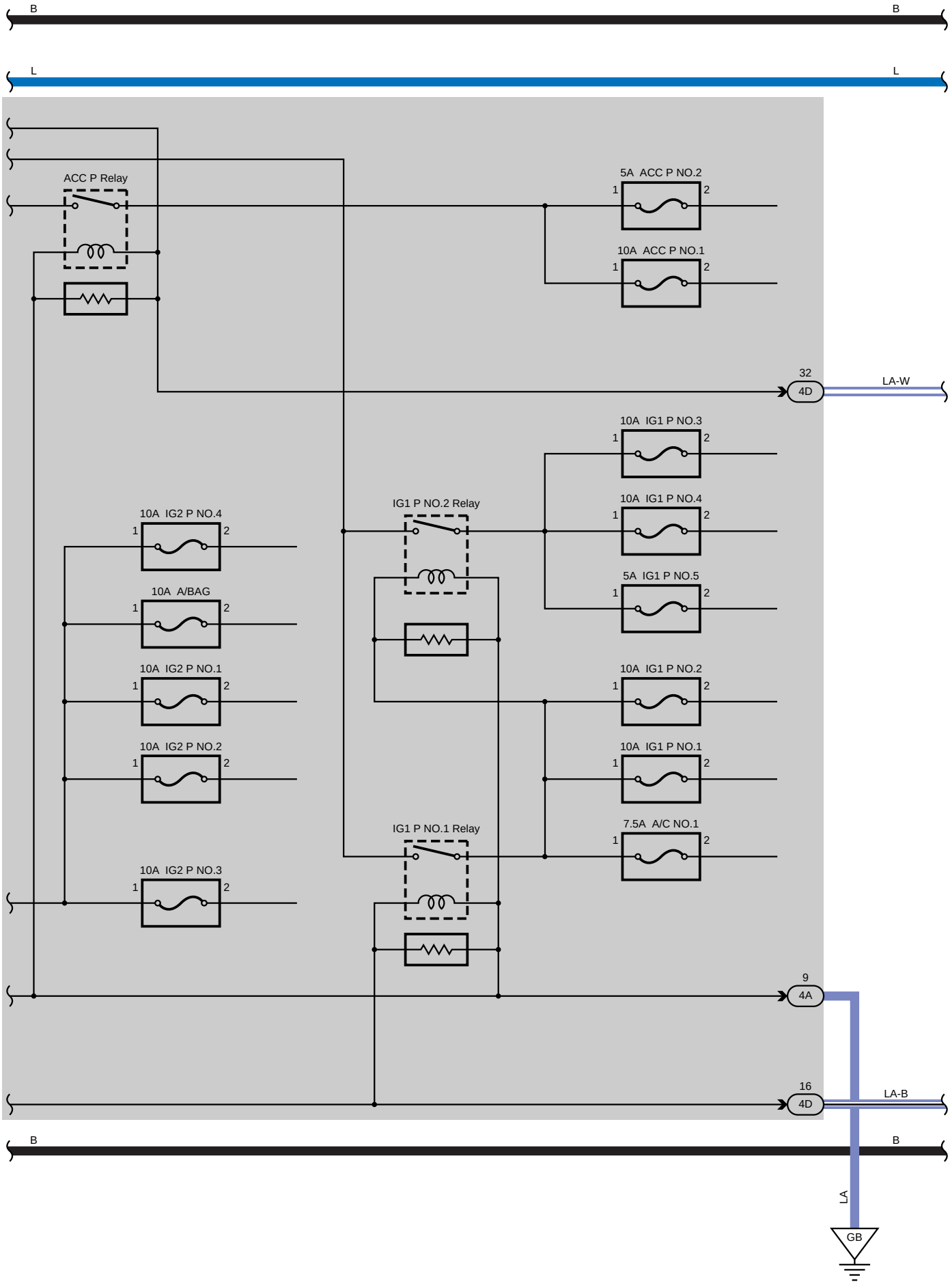
B
B
L
L
ACC P Relay
5A ACC P NO.2
10A ACC P NO.1
32
4D
LA-W
10A IG1 P NO.3
10A IG1 P NO.4
IG1 P NO.2 Relay
5A IG1 P NO.5
10A IG2 P NO.4
10A A/BAG
10A IG2 P NO.1
10A IG1 P NO.2
10A IG2 P NO.2
10A IG1 P NO.1
IG1 P NO.1 Relay
7.5A A/C NO.1
10A IG2 P NO.3
9
4A
16
4D
LA-B
B
B
LA
GB

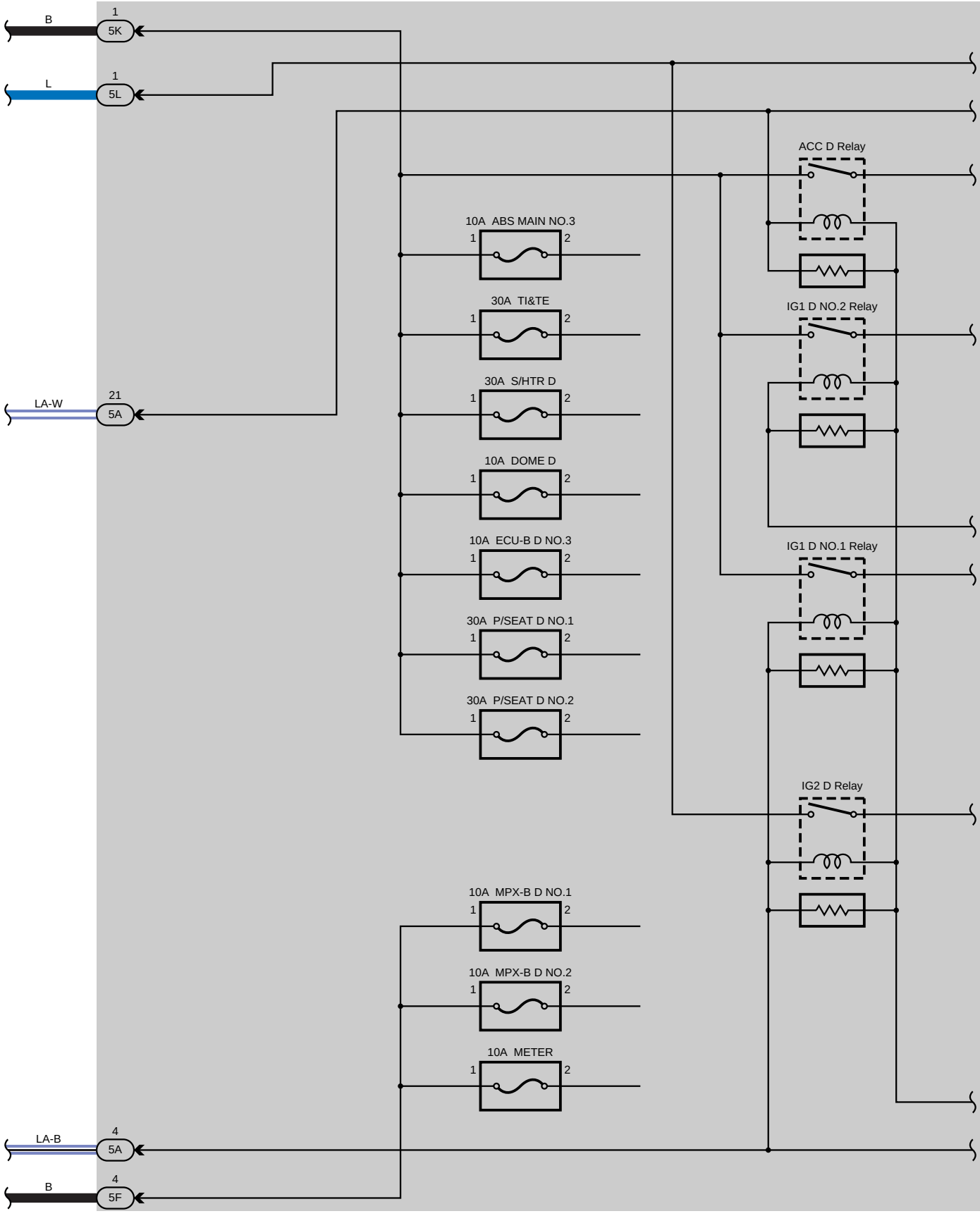
B
1
5K
L
1
5L
LA-W
21
5A
LA-B
4
5A
B
4
5F
10A ABS MAIN NO.3
30A TI&TE
30A S/HTR D
10A DOME D
10A ECU-B D NO.3
30A P/SEAT D NO.1
30A P/SEAT D NO.2
10A MPX-B D NO.1
10A MPX-B D NO.2
10A METER
ACC D Relay
IG1 D NO.2 Relay
IG1 D NO.1 Relay
IG2 D Relay

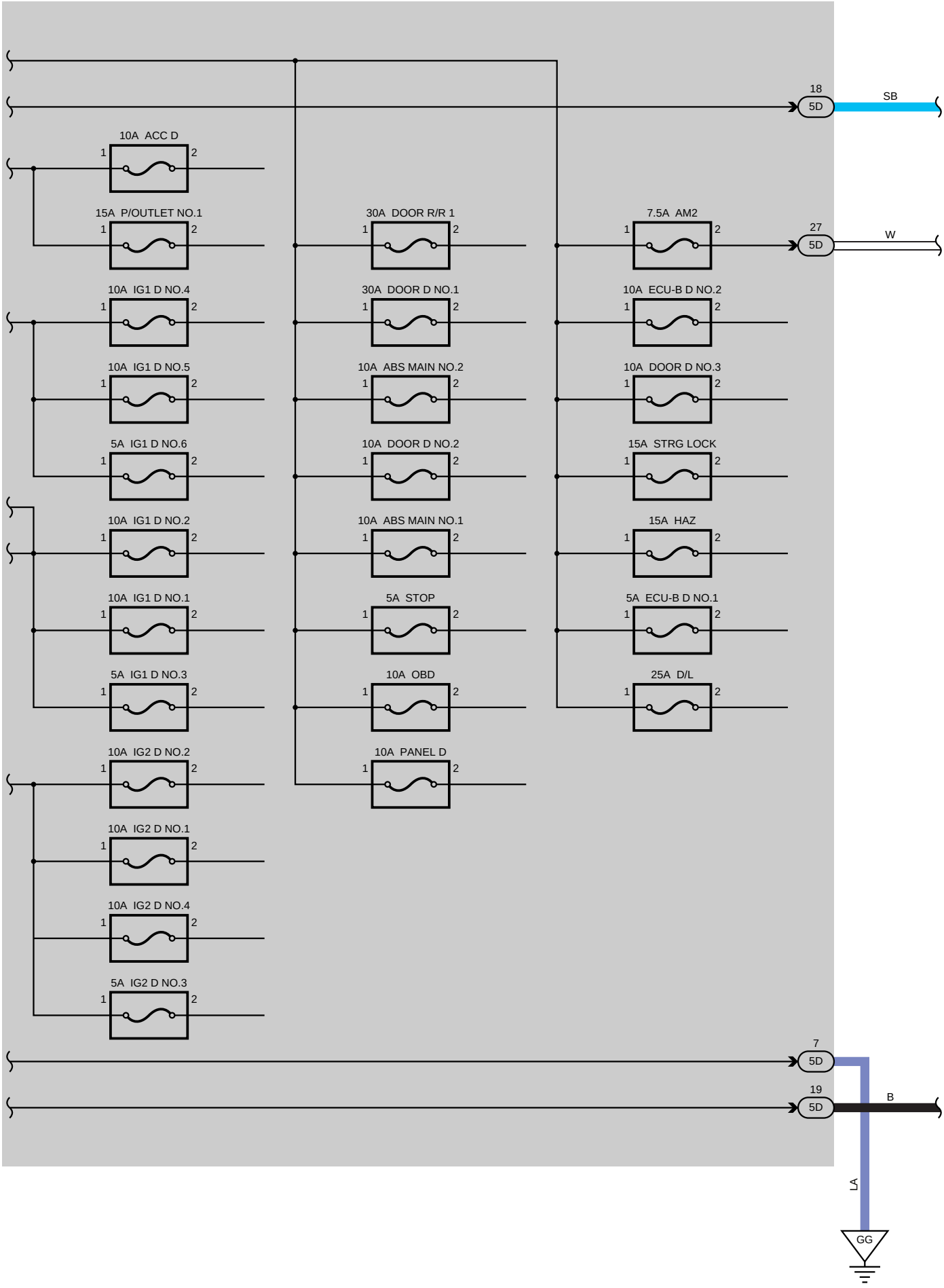
18
5D
SB
10A ACC D
15A P/OUTLET NO.1
30A DOOR R/R 1
7.5A AM2
27
5D
W
10A IG1 D NO.4
30A DOOR D NO.1
10A ECU-B D NO.2
10A IG1 D NO.5
10A ABS MAIN NO.2
10A DOOR D NO.3
5A IG1 D NO.6
10A DOOR D NO.2
15A STRG LOCK
10A IG1 D NO.2
10A ABS MAIN NO.1
15A HAZ
10A IG1 D NO.1
5A STOP
5A ECU-B D NO.1
5A IG1 D NO.3
10A OBD
25A D/L
10A IG2 D NO.2
10A PANEL D
10A IG2 D NO.1
10A IG2 D NO.4
5A IG2 D NO.3
7
5D
19
5D
B
LA
GG

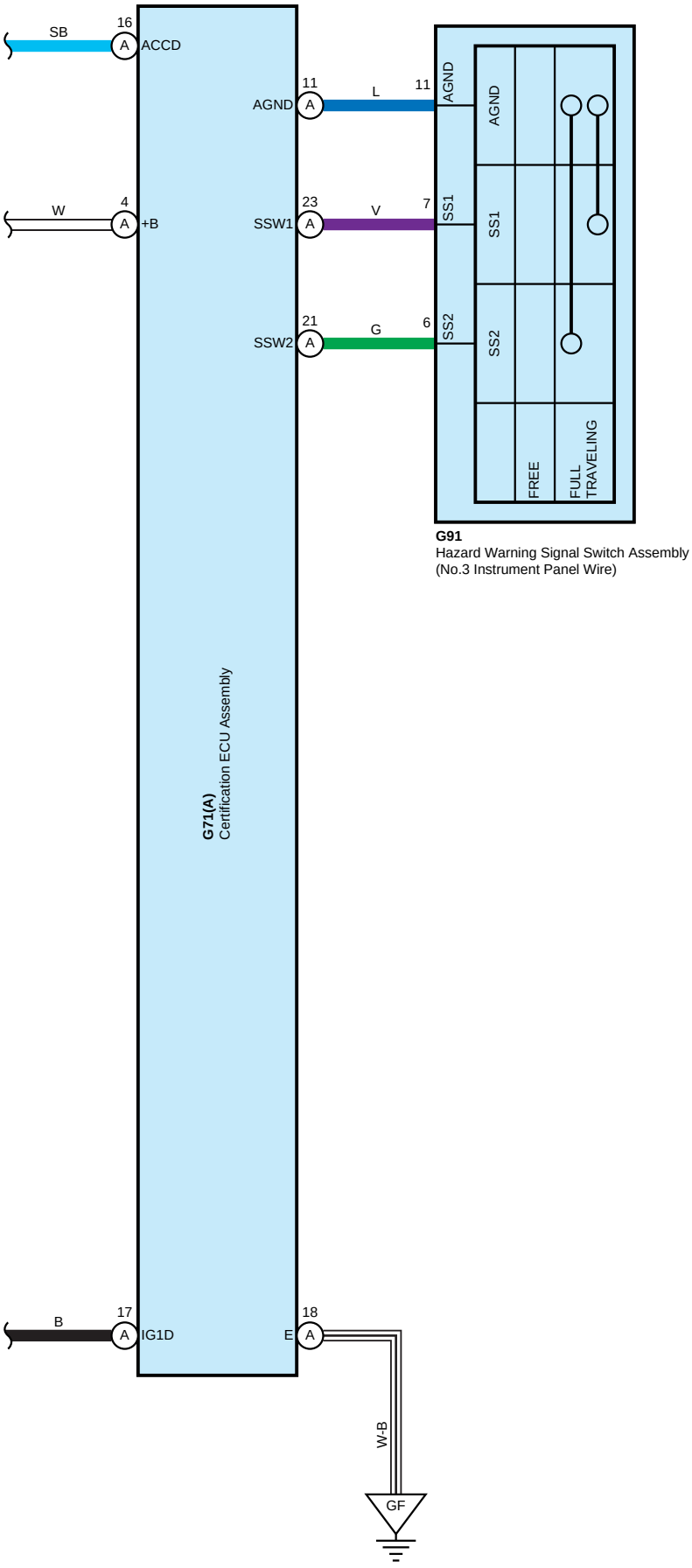
SB
16
A
ACCD
W
4
A
+B
B
17
A
IG1D
AGND
11
A
L
11
SSW1
23
A
V
7
SSW2
21
A
G
6
E
18
A
AGND
SS1
SS2
AGND
SS1
SS2
FREE
FULL TRAVELING
G71(A)
Certification ECU Assembly
G91
Hazard Warning Signal Switch Assembly
(No.3 Instrument Panel Wire)
W-B
GF

A56
Black

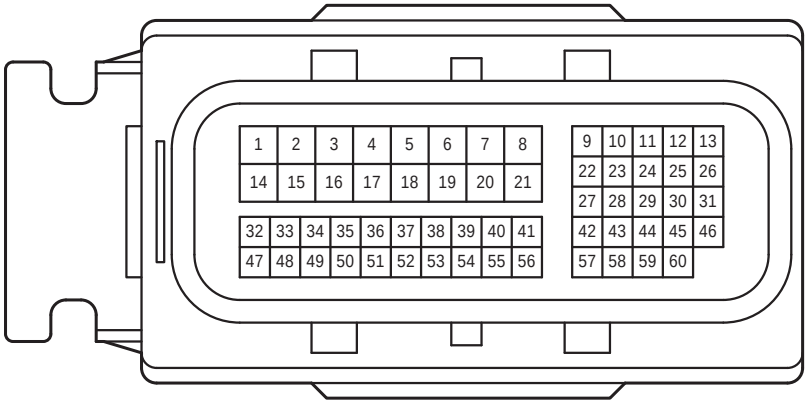

90980-12931

A59
Black

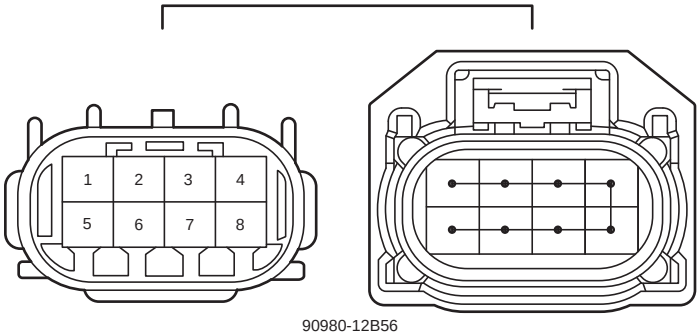

90980-12B56

A62
Black

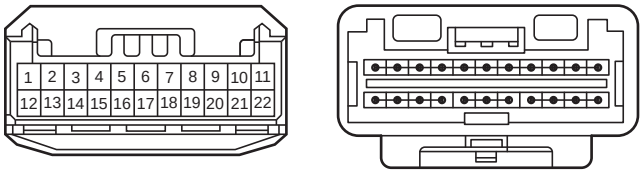

90980-12B54

A63
Black

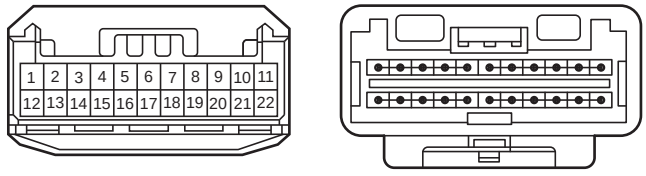

90980-12B54

G66
Black

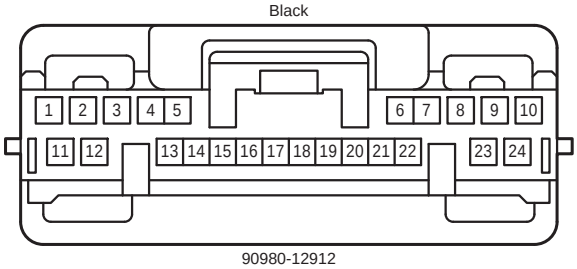

90980-12912

G71
White

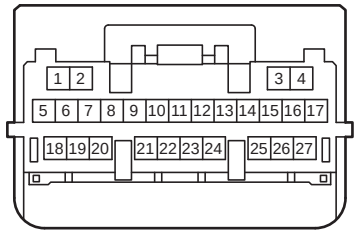

90980-12B78

G81
White

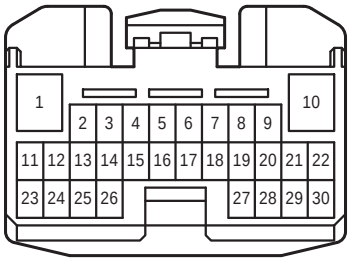

90980-12562

G84
Black

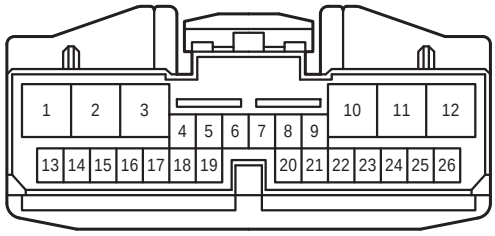

82824-12510

G91
White

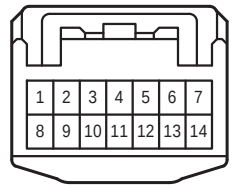

90980-12370

G129
White

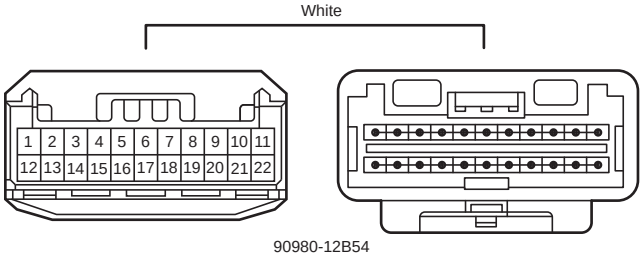

90980-12B54

L118
White

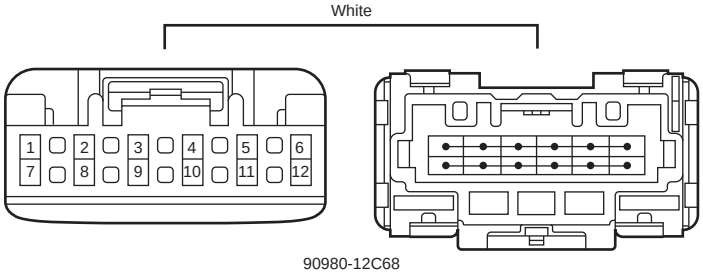

90980-12C68

P6
White

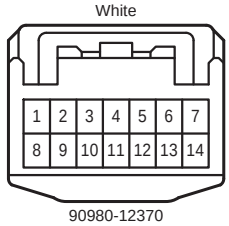

90980-12370

P13

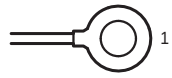

82675-28470

P14

90980-09204

P15

90980-09205

U1

90980-09A81

U2

82675-28470

X1

90980-09D56

X2

90980-09205

1A
White

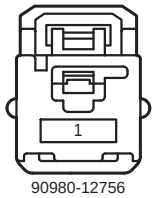

90980-12756

1B
Black

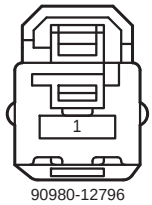

90980-12796

1G

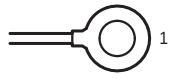

82675-45010

1H

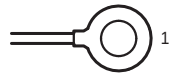

82675-45010

1L

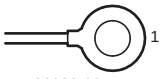

90980-09D55

1M

90980-09877

4A
White

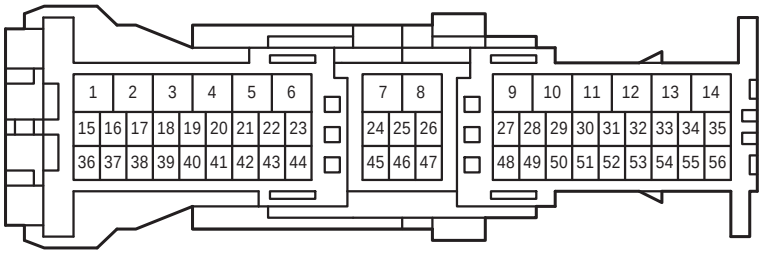

90980-12943

4D
White

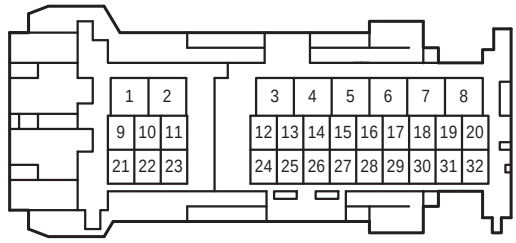

90980-12A48

4F
White

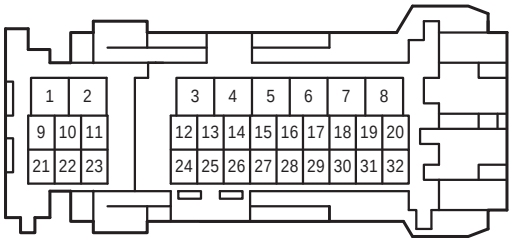

90980-12A47

4H
White

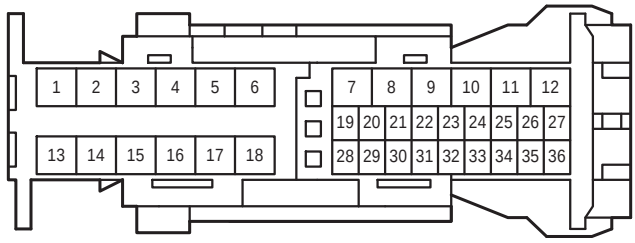

90980-12944

4K
Gray

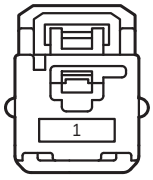

90980-12756

4L
Gray

90980-10995

5A
White

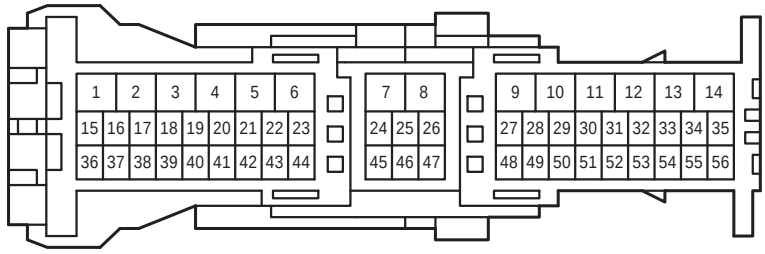

90980-12943

5D
White

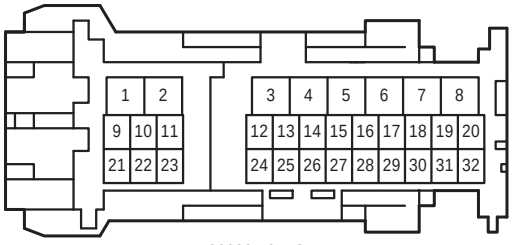

90980-12A48

5F
White

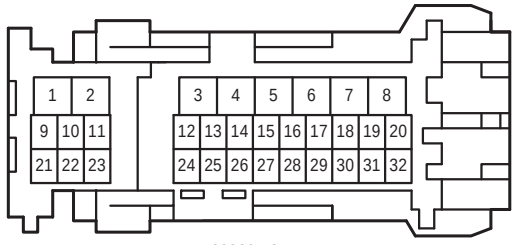

90980-12A47

5K
White

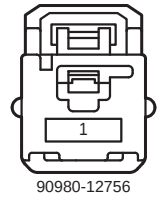

90980-12756

5L
White

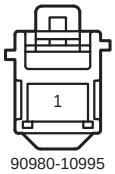

90980-10995

6A

82675-33060

6B

90980-09877

6C

90980-09566

6D
White

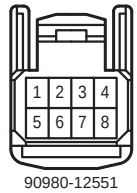

90980-12551

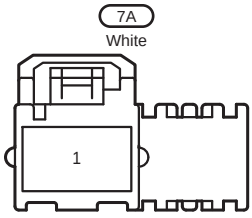

82824-74010

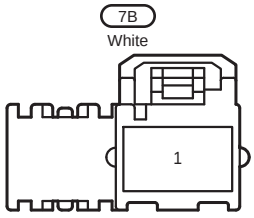

82824-47580

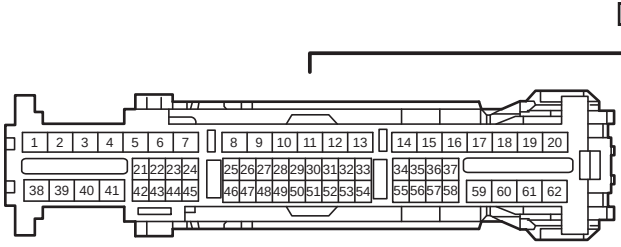

90980-12B22

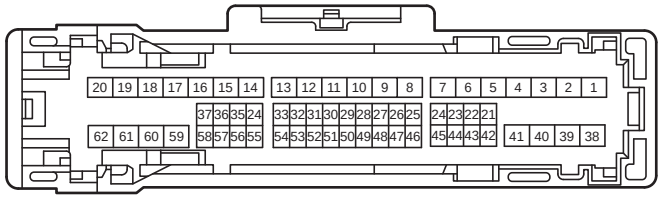

90980-12B21

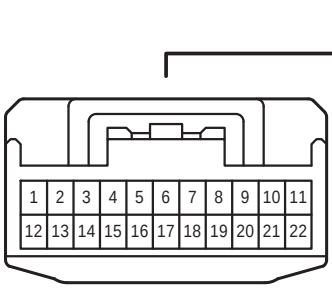

90980-12372

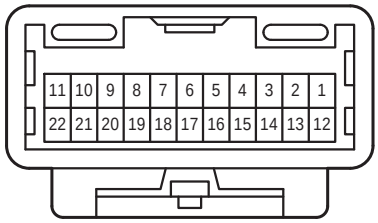

90980-12371

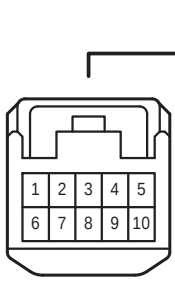

90980-12368

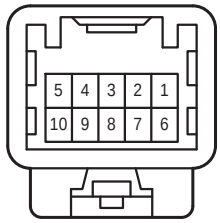

90980-12367

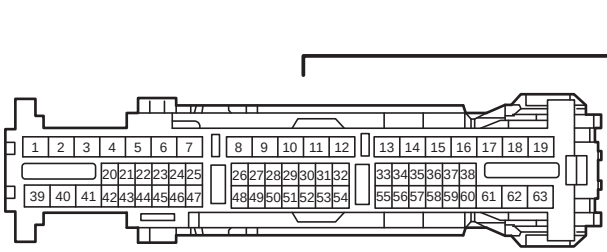

90980-12B20

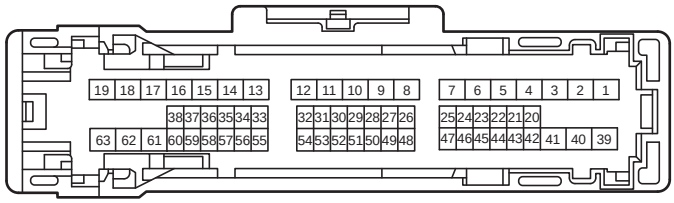

90980-12B19

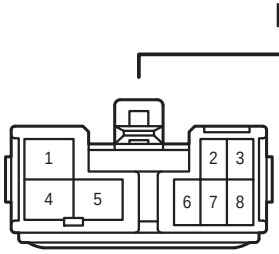

90980-10877

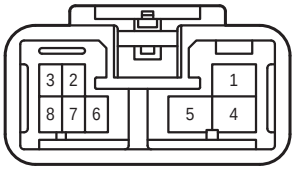

90980-10876

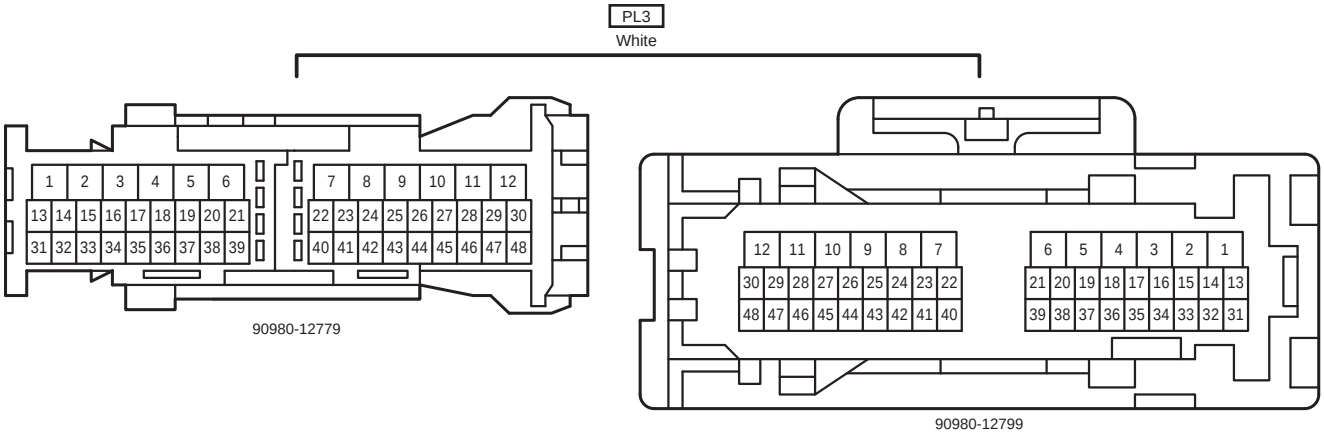
PL3
White
1 2 3 4 5 6 7 8 9 10 11 12
13 14 15 16 17 18 19 20 21 22 23 24 25 26 27 28 29 30
31 32 33 34 35 36 37 38 39 40 41 42 43 44 45 46 47 48
90980-12779
12 11 10 9 8 7 6 5 4 3 2 1
30 29 28 27 26 25 24 23 22 21 20 19 18 17 16 15 14 13
48 47 46 45 44 43 42 41 40 39 38 37 36 35 34 33 32 31
90980-12799