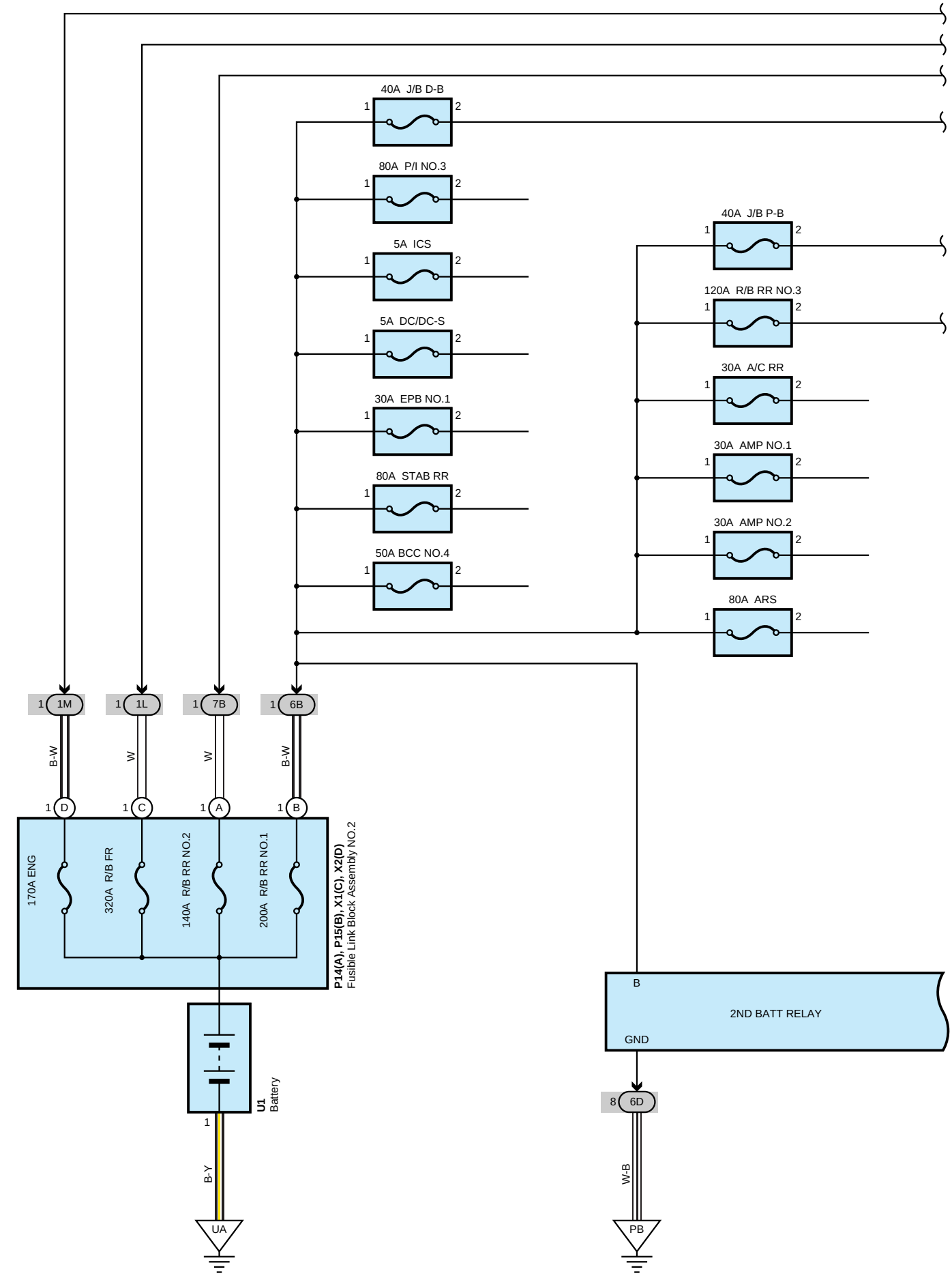
40A J/B D-B
80A P/I NO.3
5A ICS
5A DC/DC-S
30A EPB NO.1
80A STAB RR
50A BCC NO.4
40A J/B P-B
120A R/B RR NO.3
30A A/C RR
30A AMP NO.1
30A AMP NO.2
80A ARS
1M
1L
7B
6B
B-W
W
W
B-W
D
C
A
B
170A ENG
320A R/B FR
140A R/B RR NO.2
200A R/B RR NO.1
P14(A), P15(B), X1(C), X2(D)
Fusible Link Block Assembly NO.2
U1
Battery
B-Y
UA
B
2ND BATT RELAY
GND
6D
W-B
PB

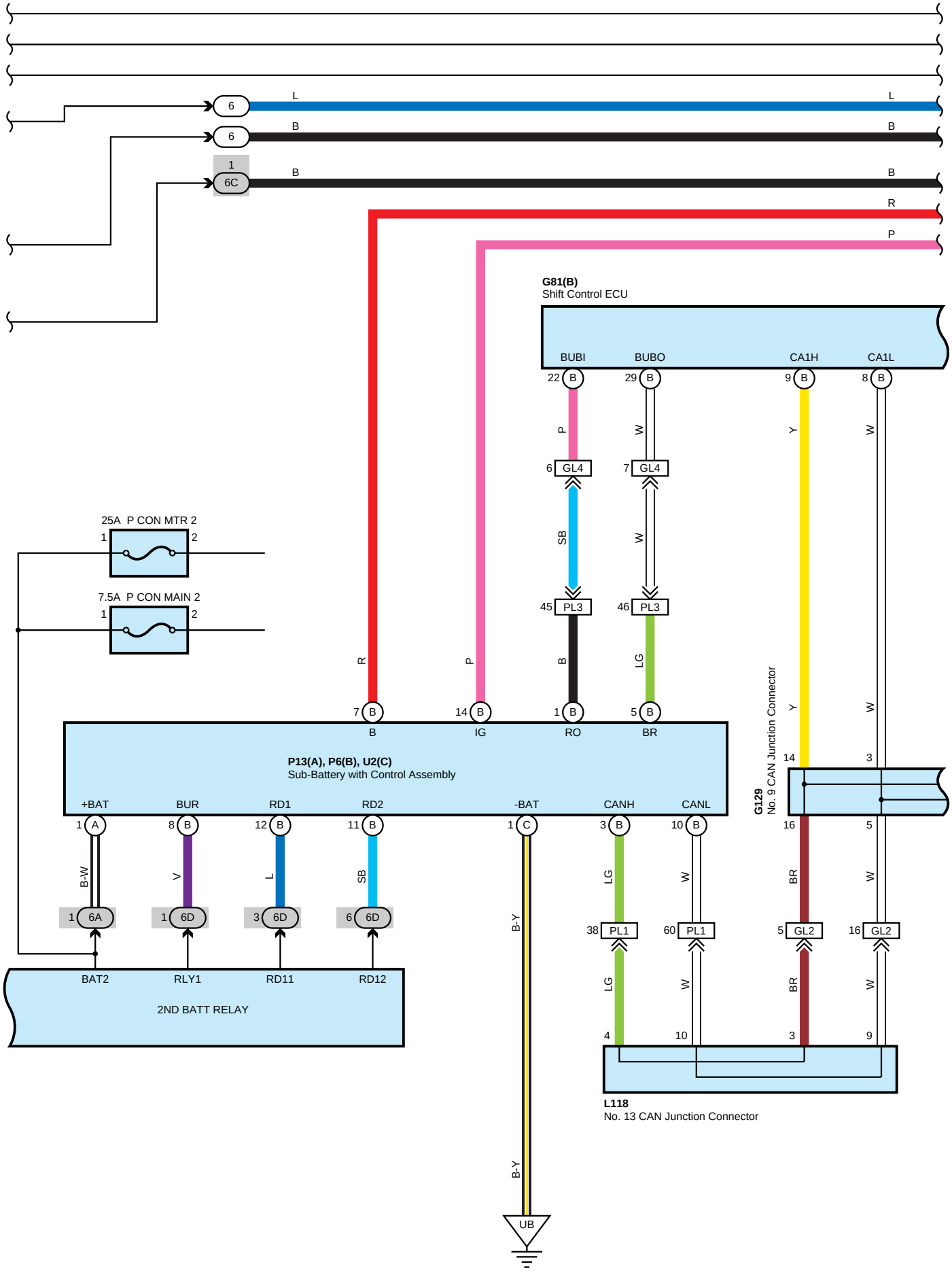
6
L
L
6
B
B
1
6C
B
B
R
P
G81(B)
Shift Control ECU
BUBI
BUBO
CA1H
CA1L
22 B
29 B
9 B
8 B
P
W
Y
W
6 GL4
7 GL4
SB
W
45 PL3
46 PL3
R
P
B
LG
7 B
14 B
1 B
5 B
B
IG
RO
BR
25A P CON MTR 2
1
2
7.5A P CON MAIN 2
1
2
P13(A), P6(B), U2(C)
Sub-Battery with Control Assembly
+BAT
BUR
RD1
RD2
-BAT
CANH
CANL
1 A
8 B
12 B
11 B
1 C
3 B
10 B
B-W
V
L
SB
B-Y
LG
W
1 6A
1 6D
3 6D
6 6D
38 PL1
60 PL1
BAT2
RLY1
RD11
RD12
2ND BATT RELAY
LG
W
4
10
UB
G129
No. 9 CAN Junction Connector
Y
W
14
3
16
5
BR
W
5 GL2
16 GL2
BR
W
3
9
L118
No. 13 CAN Junction Connector

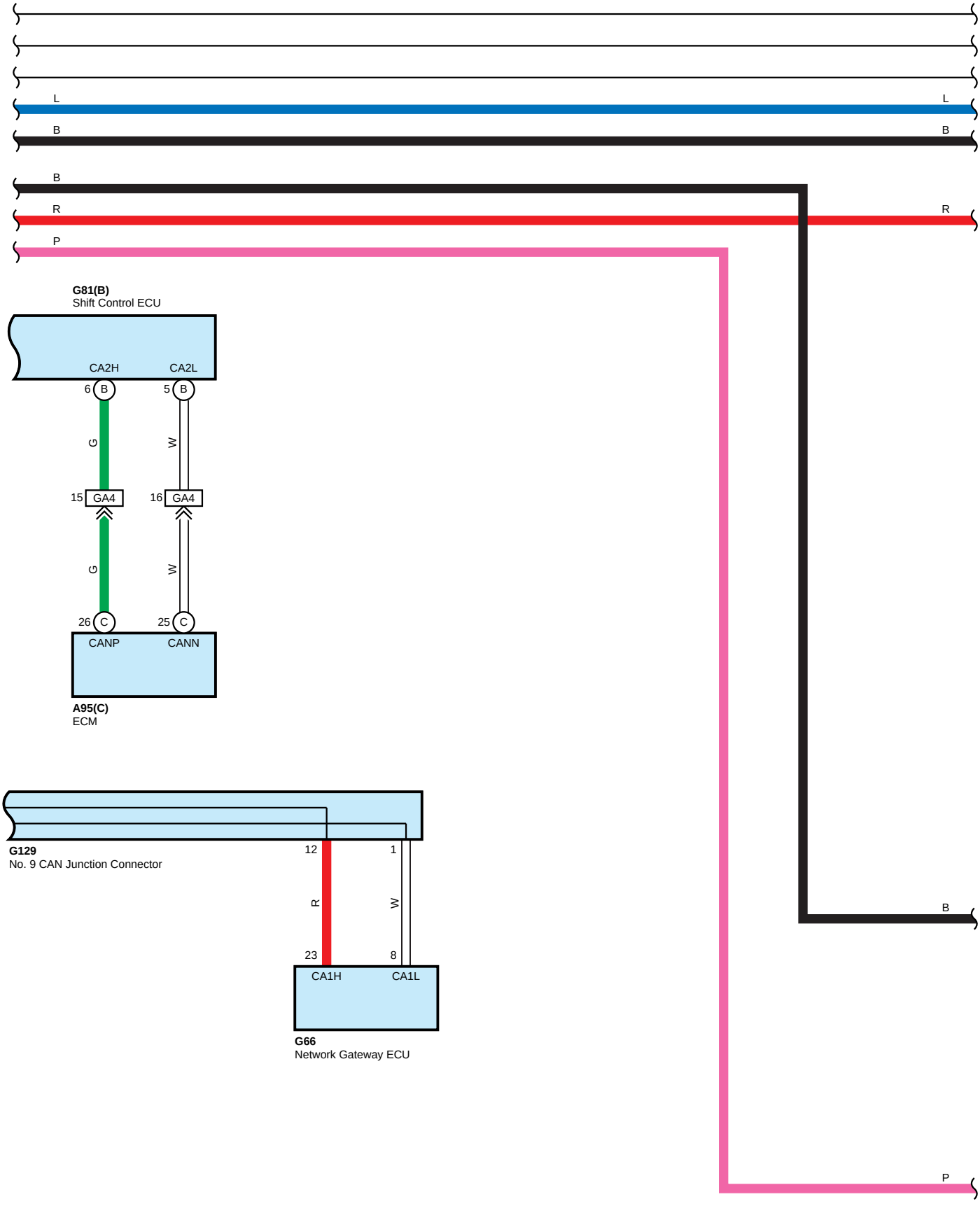
L
L
B
B
B
R
R
P
G81(B)
Shift Control ECU
CA2H
CA2L
6 B
5 B
G
W
15 GA4
16 GA4
G
W
26 C
25 C
CANP
CANN
A95(C)
ECM
G129
No. 9 CAN Junction Connector
12
1
R
W
23
8
CA1H
CA1L
G66
Network Gateway ECU
B
P

Power Source (V35A-FTS) (RHD)

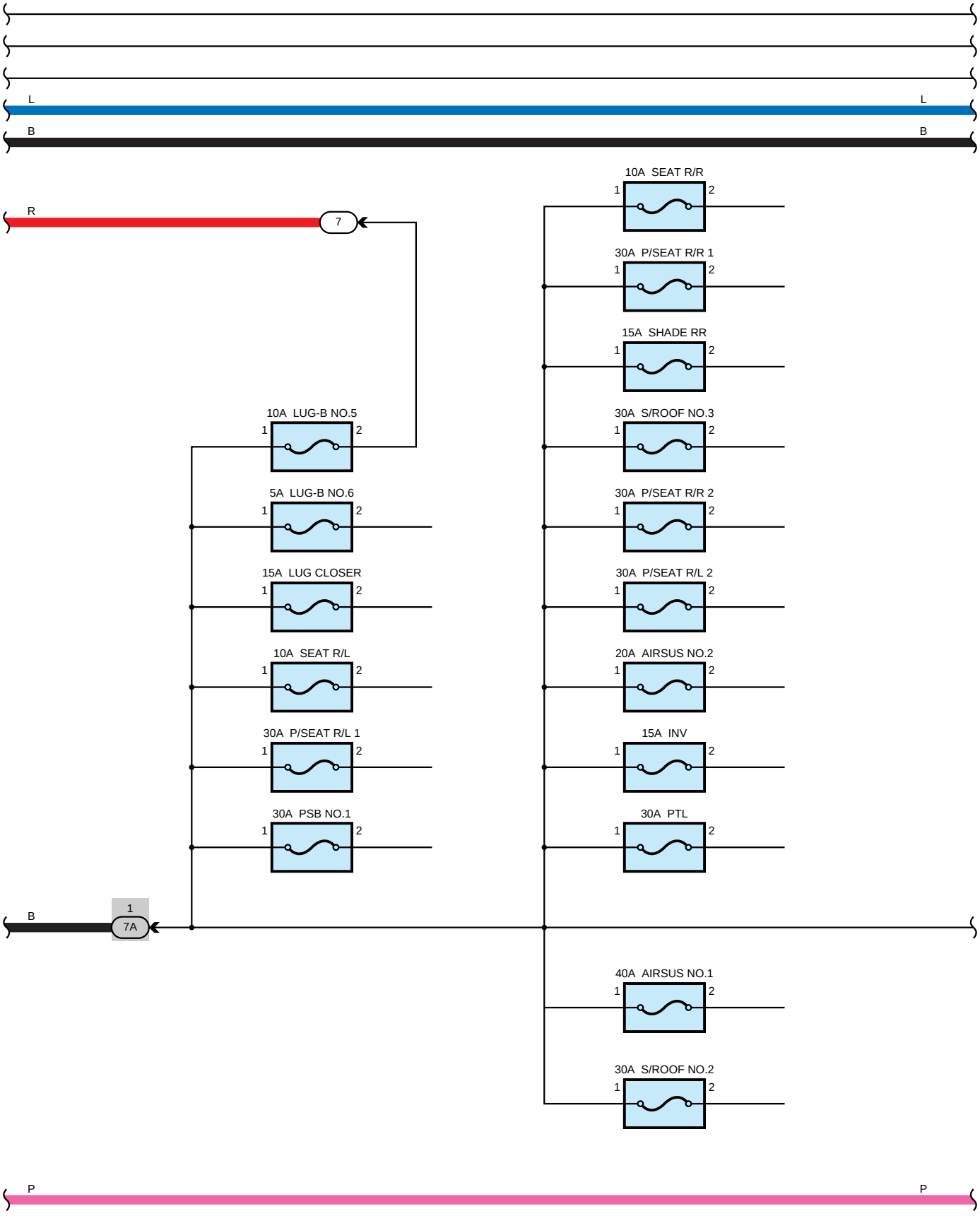

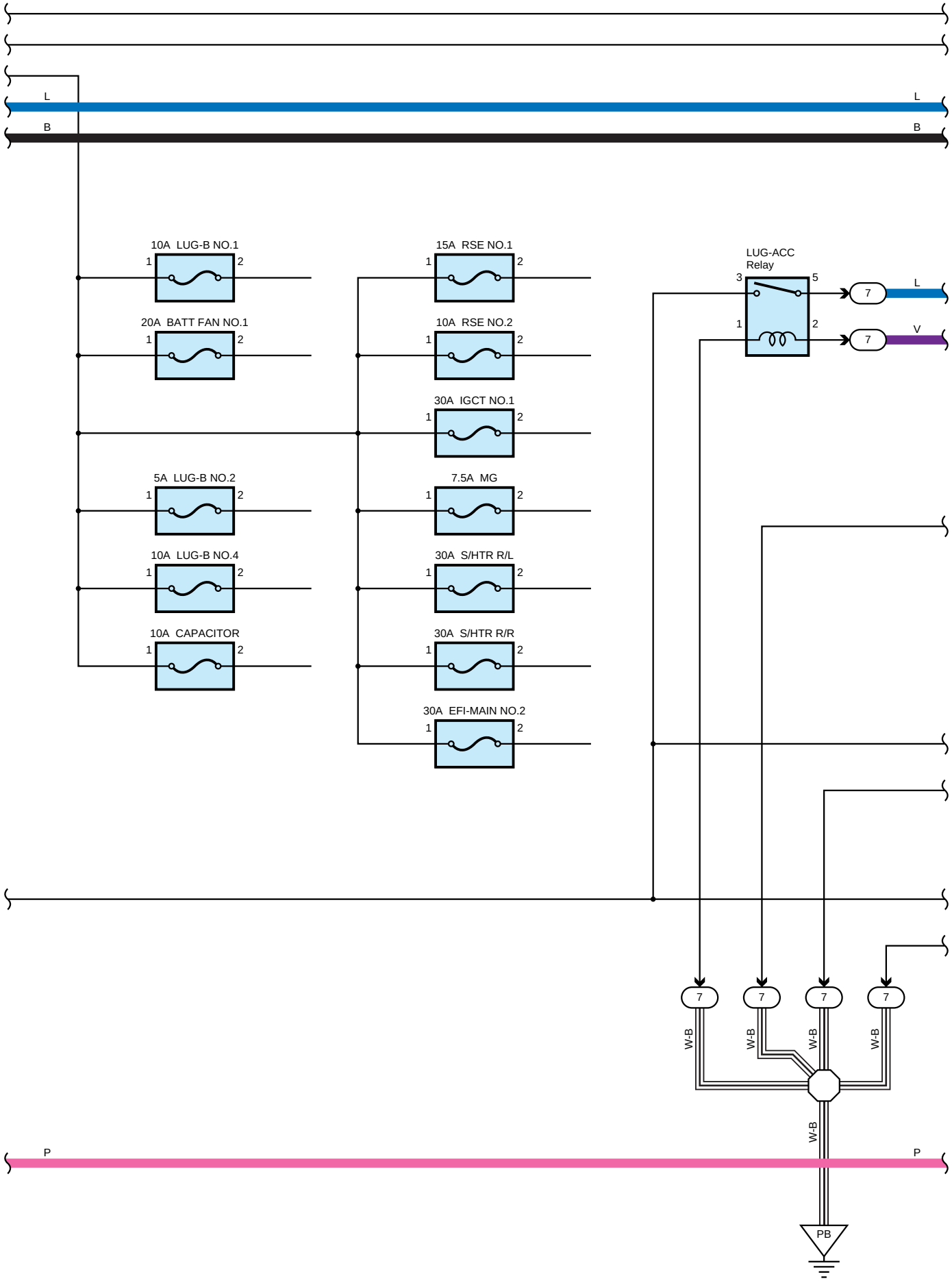
L
L
B
B
10A LUG-B NO.1
20A BATT FAN NO.1
5A LUG-B NO.2
10A LUG-B NO.4
10A CAPACITOR
15A RSE NO.1
10A RSE NO.2
30A IGCT NO.1
7.5A MG
30A S/HTR R/L
30A S/HTR R/R
30A EFI-MAIN NO.2
LUG-ACC
Relay
7
L
V
W-B
P
PB

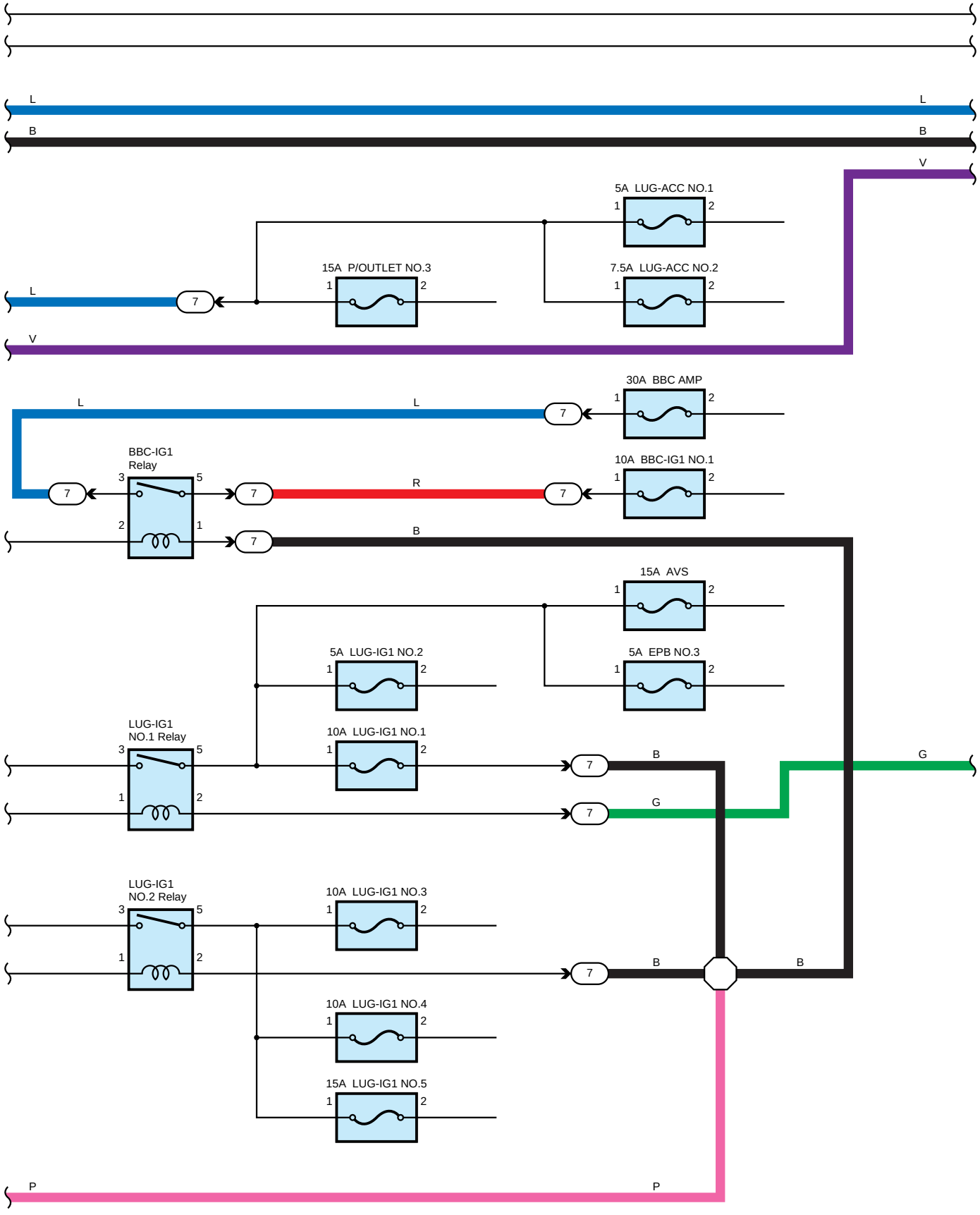
L
L
B
B
V
5A LUG-ACC NO.1
1
2
15A P/OUTLET NO.3
7.5A LUG-ACC NO.2
L
7
V
30A BBC AMP
L
L
7
BBC-IG1
Relay
3
5
10A BBC-IG1 NO.1
R
2
1
B
15A AVS
5A LUG-IG1 NO.2
5A EPB NO.3
LUG-IG1
NO.1 Relay
10A LUG-IG1 NO.1
B
G
G
LUG-IG1
NO.2 Relay
10A LUG-IG1 NO.3
B
B
10A LUG-IG1 NO.4
15A LUG-IG1 NO.5
P
P

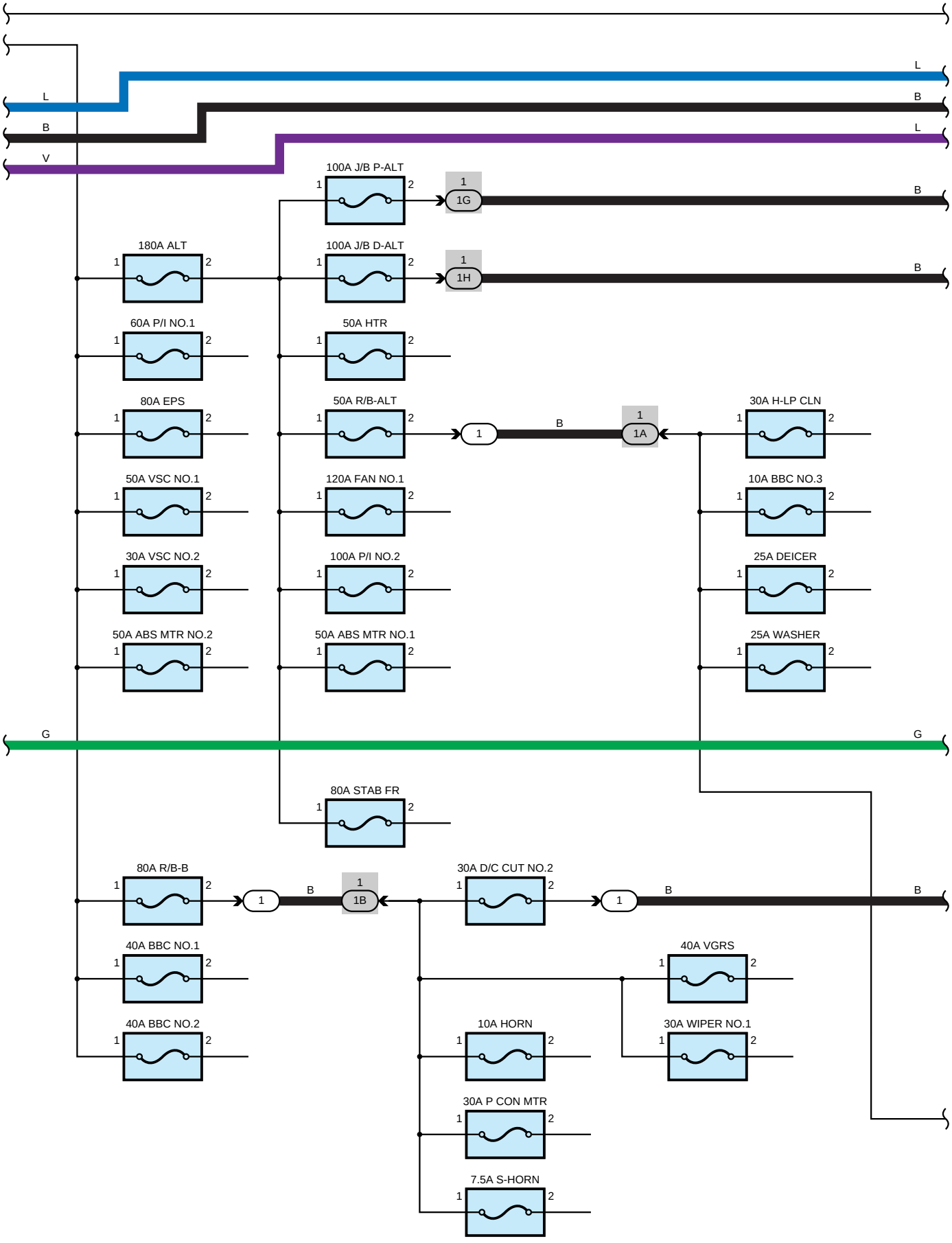
L
B
V
100A J/B P-ALT
1G
180A ALT
100A J/B D-ALT
1H
60A P/I NO.1
50A HTR
80A EPS
50A R/B-ALT
1A
30A H-LP CLN
50A VSC NO.1
120A FAN NO.1
10A BBC NO.3
30A VSC NO.2
100A P/I NO.2
25A DEICER
50A ABS MTR NO.2
50A ABS MTR NO.1
25A WASHER
G
80A STAB FR
80A R/B-B
1B
30A D/C CUT NO.2
40A BBC NO.1
40A VGRS
40A BBC NO.2
10A HORN
30A WIPER NO.1
30A P CON MTR
7.5A S-HORN

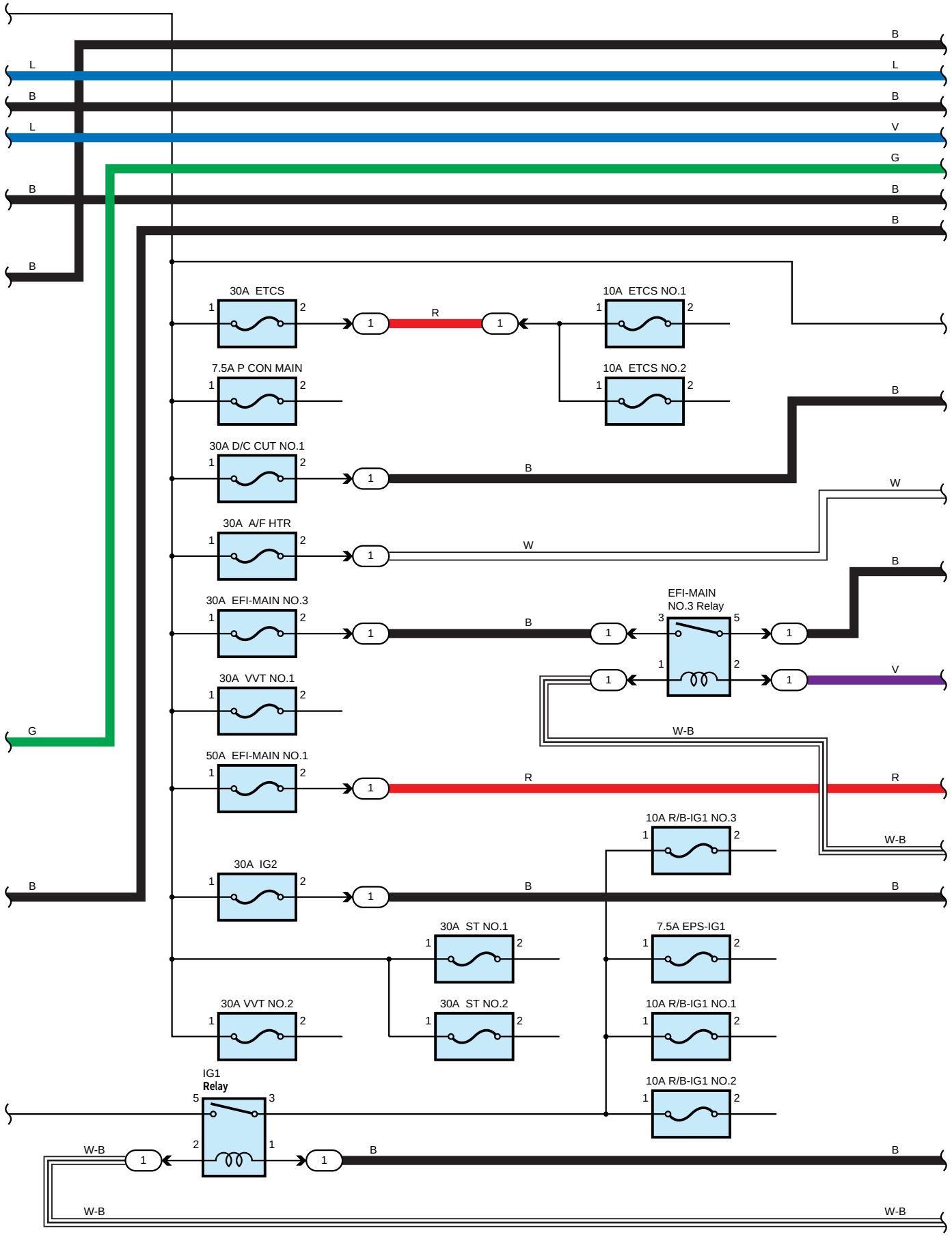
B
L
L
B
B
L
V
G
B
B
B
B
30A ETCS
10A ETCS NO.1
R
7.5A P CON MAIN
10A ETCS NO.2
B
30A D/C CUT NO.1
B
W
30A A/F HTR
W
B
30A EFI-MAIN NO.3
B
EFI-MAIN
NO.3 Relay
V
30A VVT NO.1
W-B
G
50A EFI-MAIN NO.1
R
R
10A R/B-IG1 NO.3
W-B
30A IG2
B
B
B
30A ST NO.1
7.5A EPS-IG1
30A VVT NO.2
30A ST NO.2
10A R/B-IG1 NO.1
IG1
Relay
10A R/B-IG1 NO.2
W-B
B
B
W-B
W-B

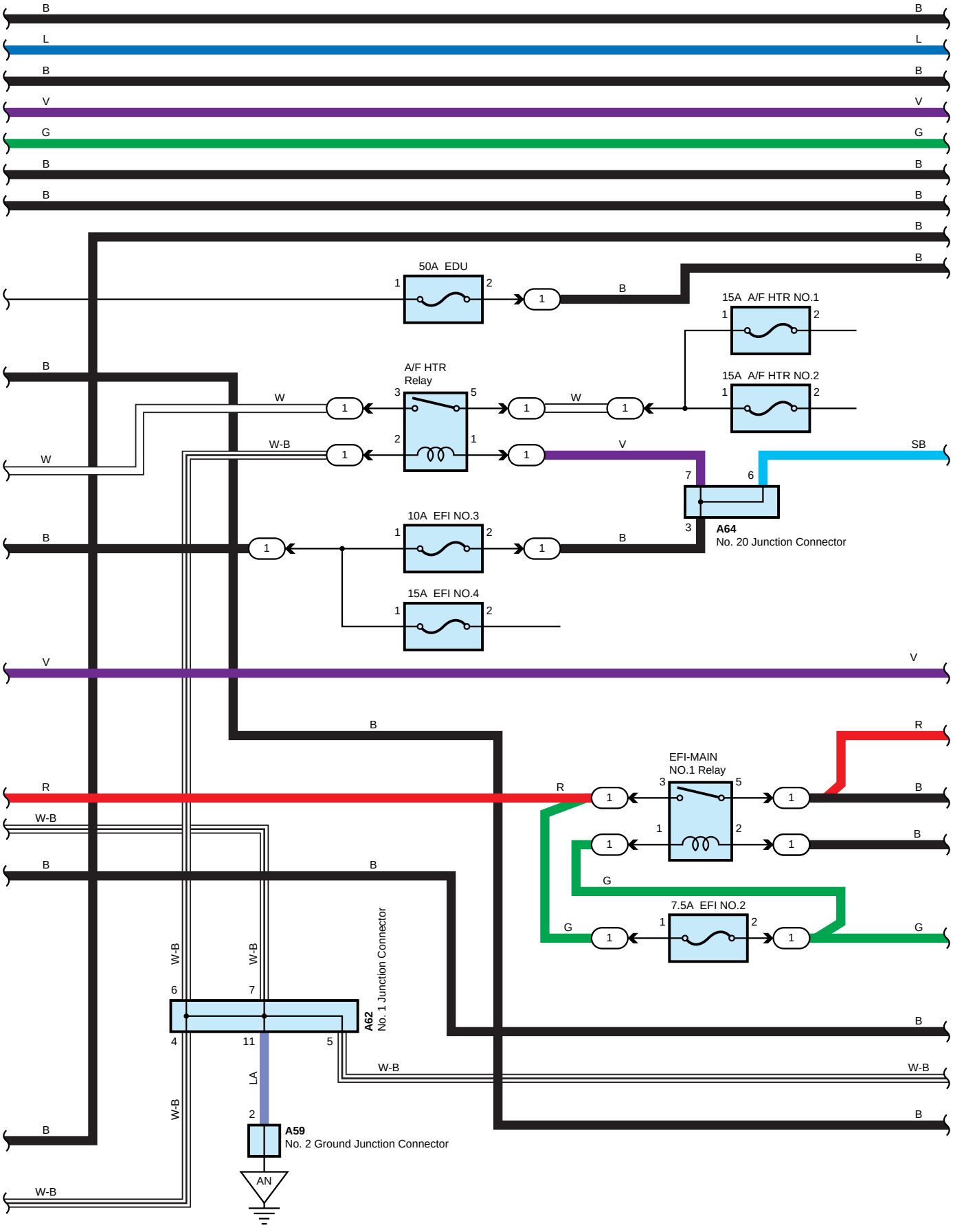
B
L
B
V
G
B
B
50A EDU
15A A/F HTR NO.1
15A A/F HTR NO.2
A/F HTR
Relay
W
W-B
V
SB
A64
No. 20 Junction Connector
10A EFI NO.3
15A EFI NO.4
R
EFI-MAIN
NO.1 Relay
7.5A EFI NO.2
G
A62
No. 1 Junction Connector
LA
A59
No. 2 Ground Junction Connector
AN

Power Source (V35A-FTS) (RHD)

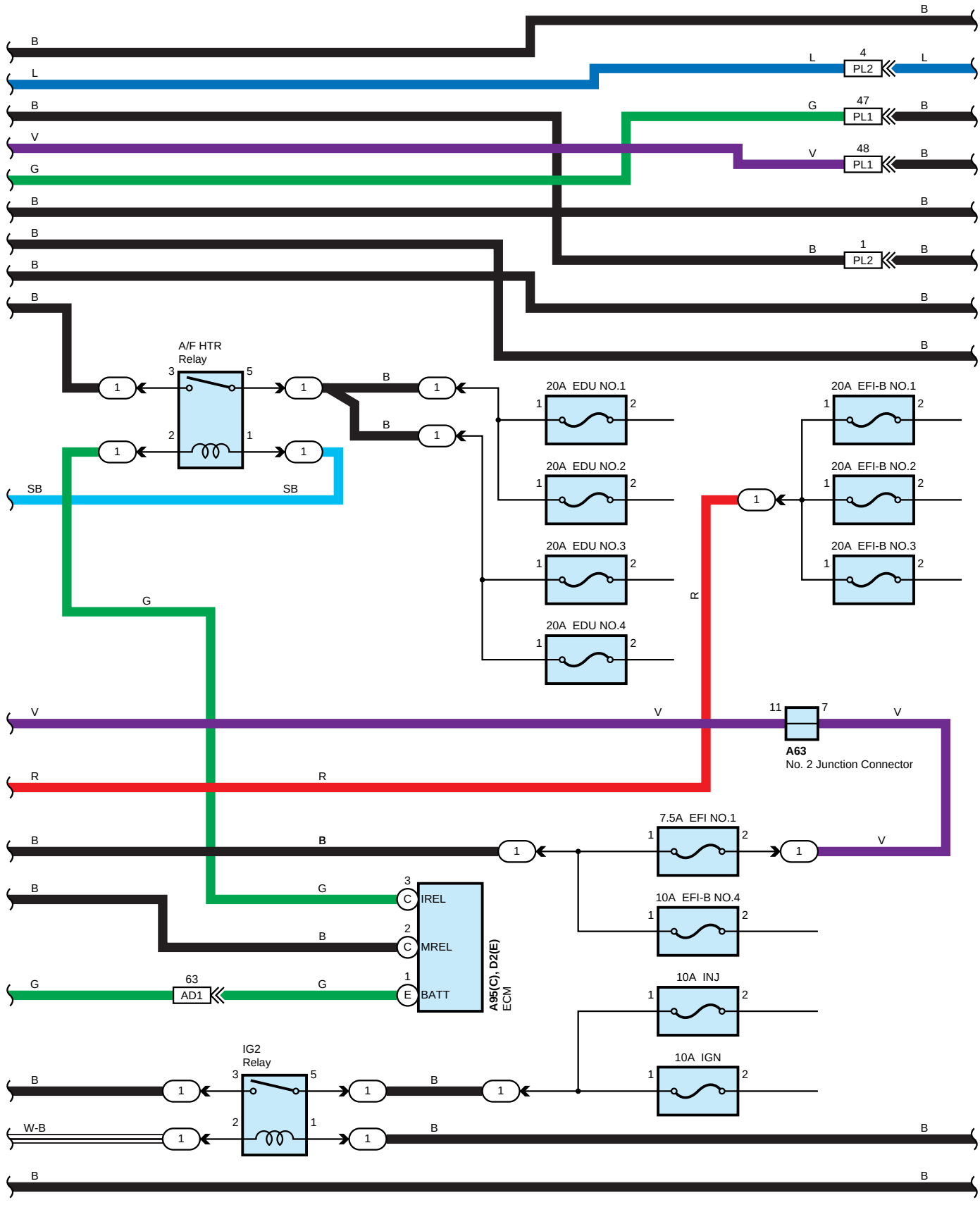

Power Source (V35A-FTS) (RHD)

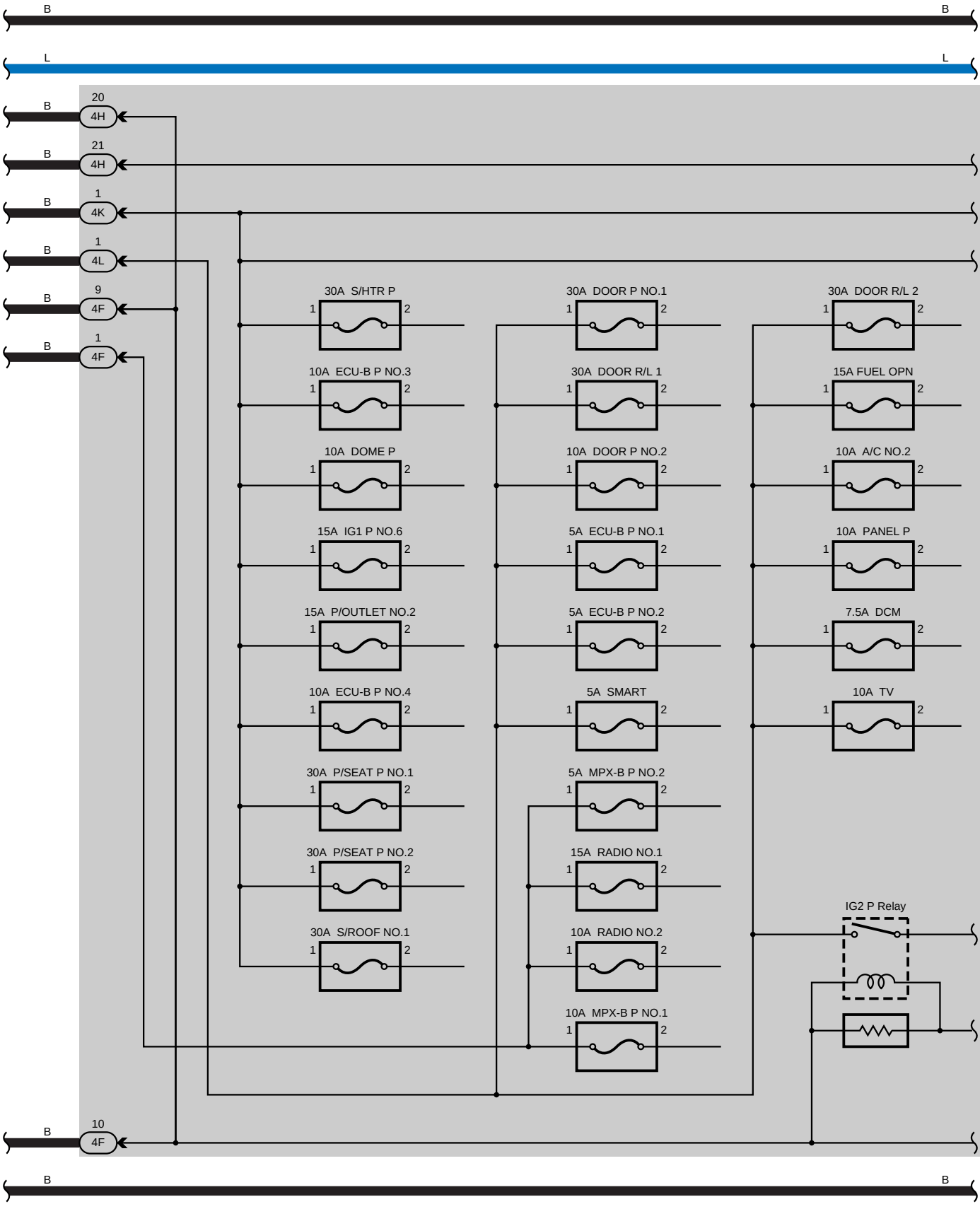

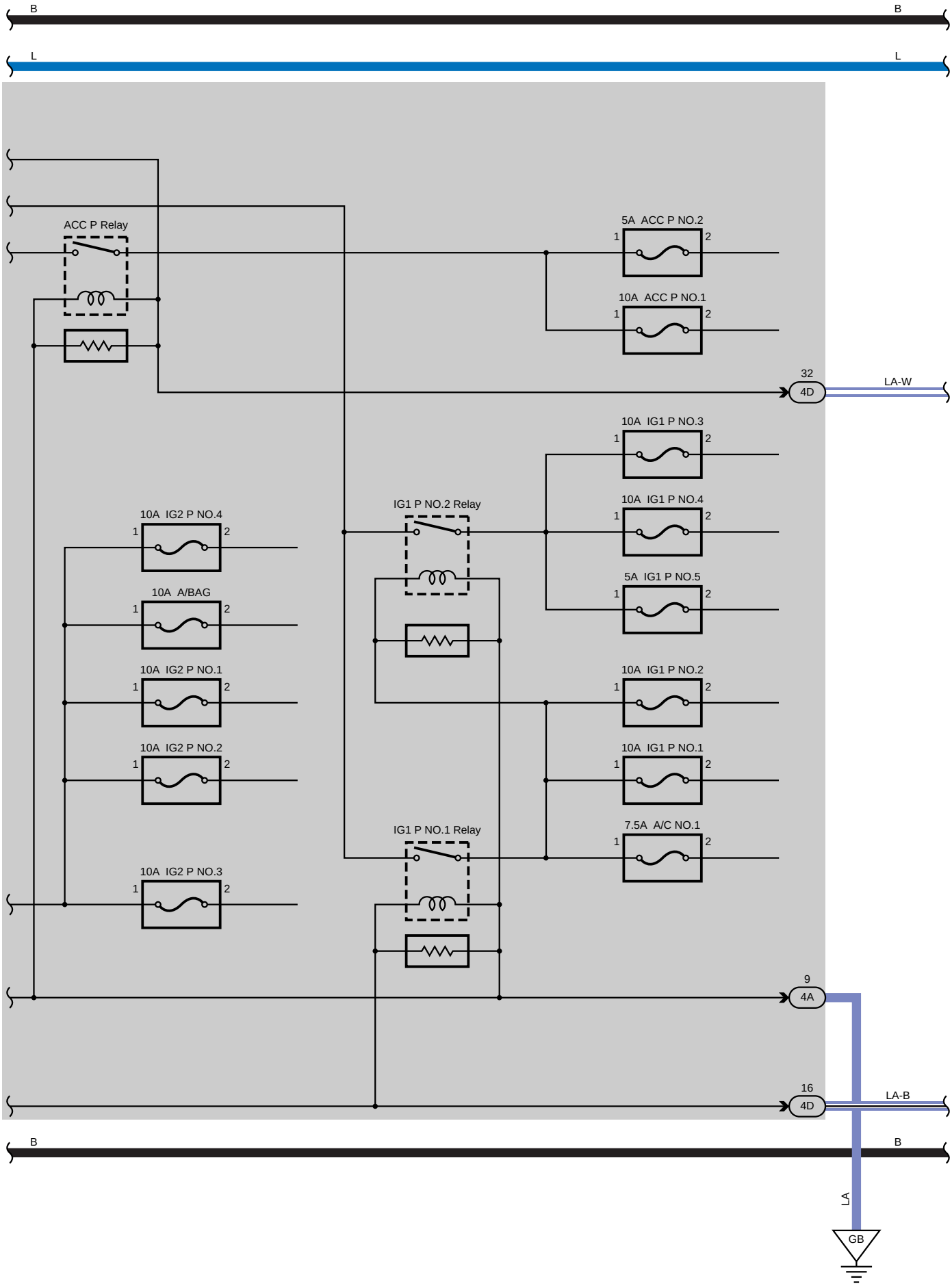
B
B
L
L
ACC P Relay
5A ACC P NO.2
10A ACC P NO.1
32
4D
LA-W
10A IG1 P NO.3
10A IG1 P NO.4
IG1 P NO.2 Relay
10A IG2 P NO.4
5A IG1 P NO.5
10A A/BAG
10A IG2 P NO.1
10A IG1 P NO.2
10A IG2 P NO.2
10A IG1 P NO.1
IG1 P NO.1 Relay
7.5A A/C NO.1
10A IG2 P NO.3
9
4A
16
4D
LA-B
B
B
LA
GB

Power Source (V35A-FTS) (RHD)

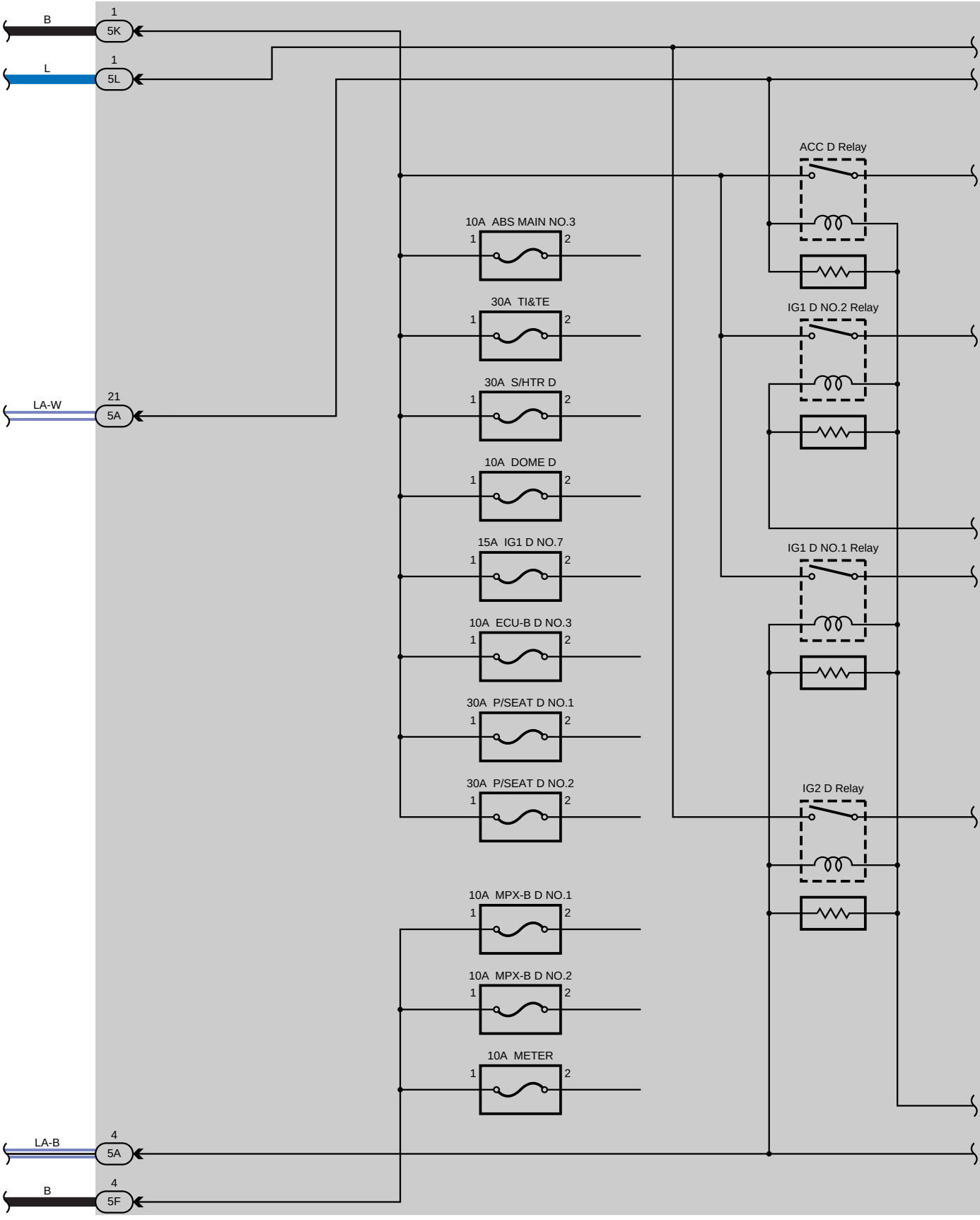

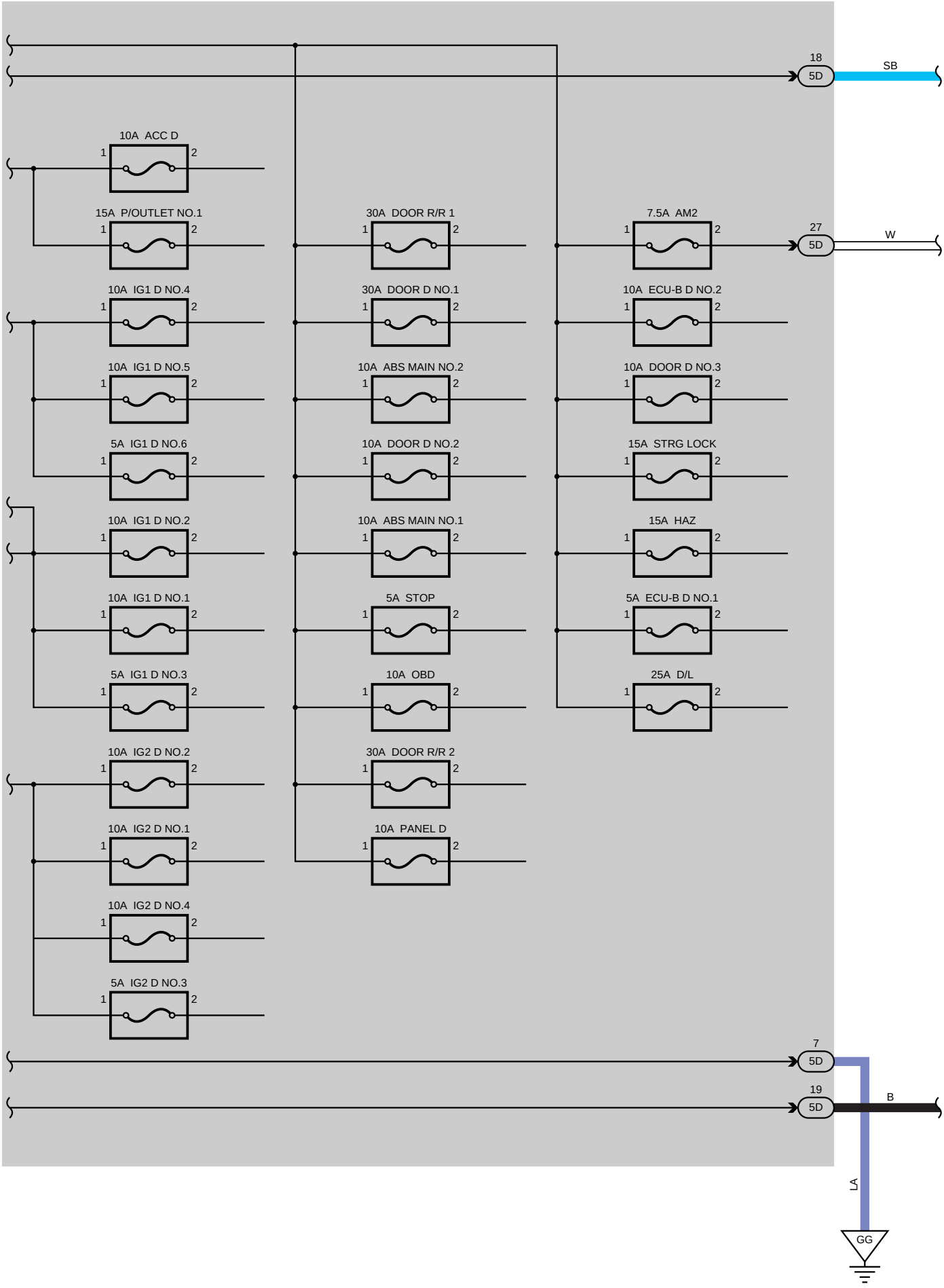
18
5D
SB
10A ACC D
15A P/OUTLET NO.1
30A DOOR R/R 1
7.5A AM2
27
5D
W
10A IG1 D NO.4
30A DOOR D NO.1
10A ECU-B D NO.2
10A IG1 D NO.5
10A ABS MAIN NO.2
10A DOOR D NO.3
5A IG1 D NO.6
10A DOOR D NO.2
15A STRG LOCK
10A IG1 D NO.2
10A ABS MAIN NO.1
15A HAZ
10A IG1 D NO.1
5A STOP
5A ECU-B D NO.1
5A IG1 D NO.3
10A OBD
25A D/L
10A IG2 D NO.2
30A DOOR R/R 2
10A IG2 D NO.1
10A PANEL D
10A IG2 D NO.4
5A IG2 D NO.3
7
5D
19
5D
B
LA
GG

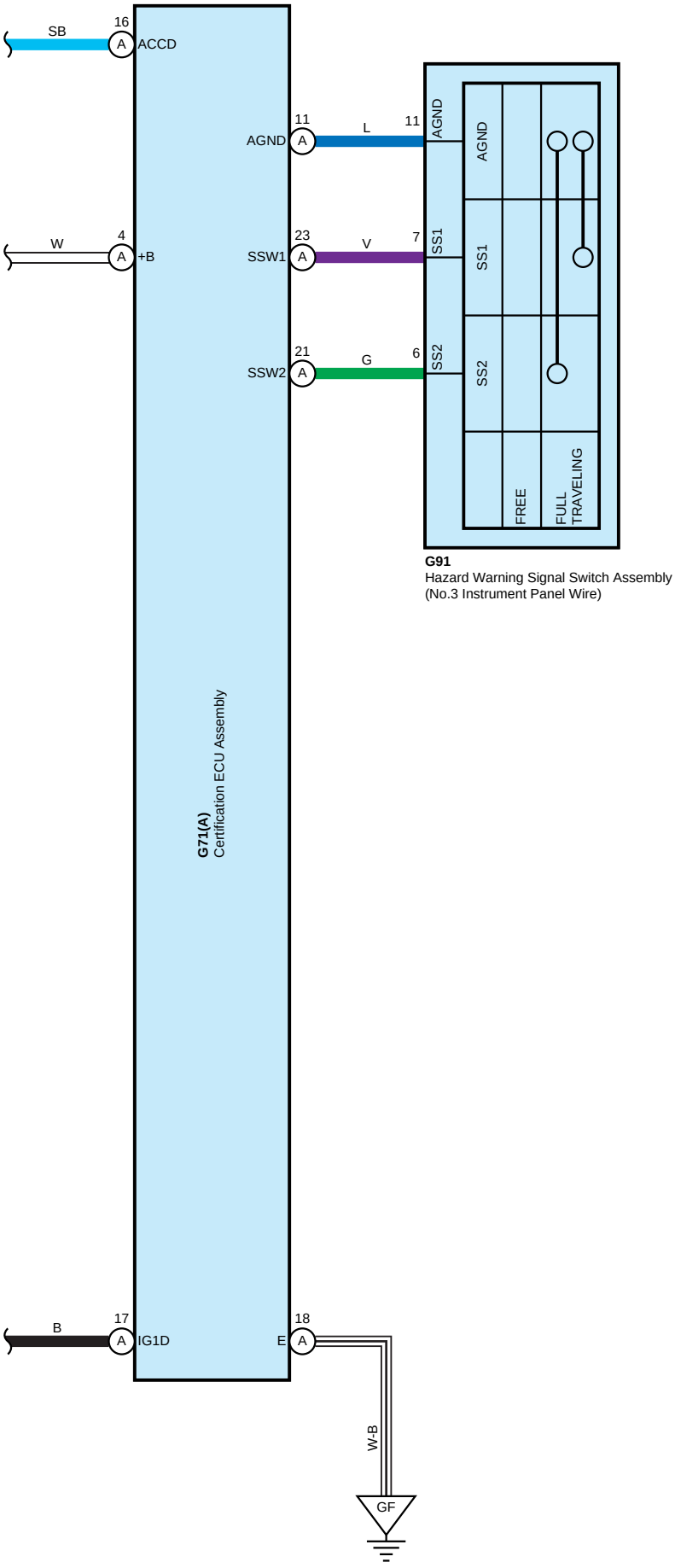
SB
16
A
ACCD
W
4
A
+B
B
17
A
IG1D
AGND
11
A
L
11
AGND
SSW1
23
A
V
7
SS1
SSW2
21
A
G
6
SS2
AGND
SS1
SS2
FREE
FULL TRAVELING
G91
Hazard Warning Signal Switch Assembly
(No.3 Instrument Panel Wire)
G71(A)
Certification ECU Assembly
E
18
A
W-B
GF

A59
Black

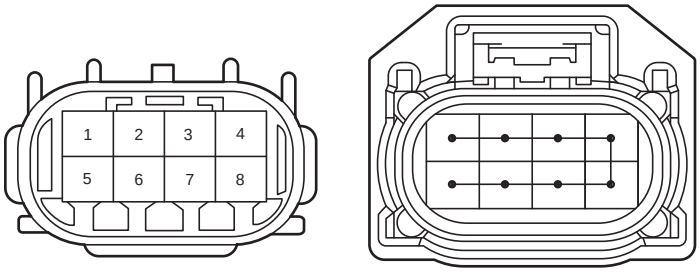

90980-12B56

A62
Black

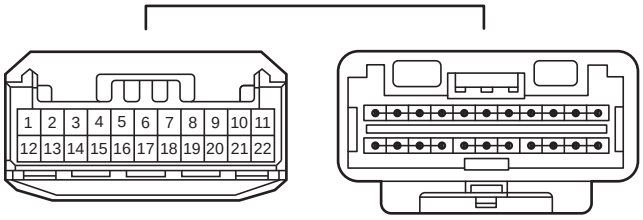

90980-12B54

A63
Black

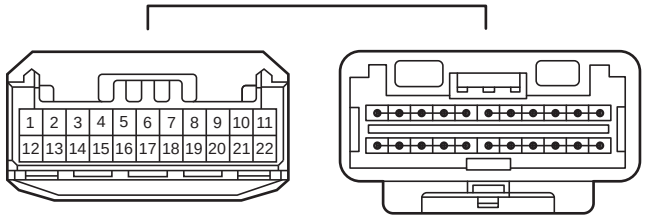

90980-12B54

A64
White

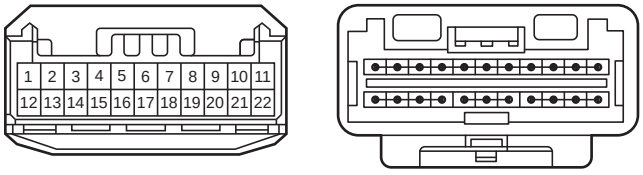

90980-12B54

A95
Black

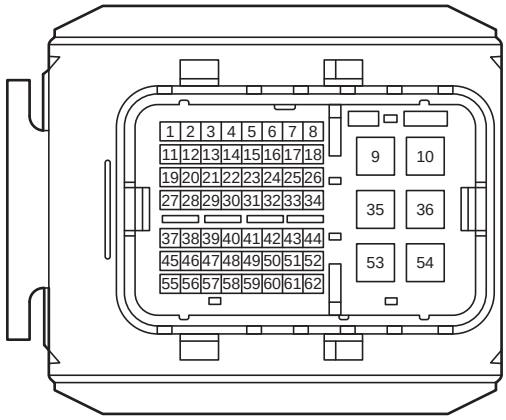

90980-12D10

D2
Black

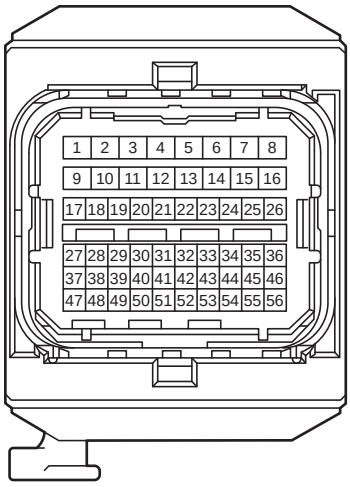

90980-12E05

G66
Black

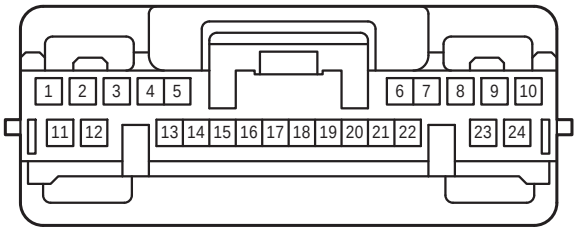

90980-12912

G71
White

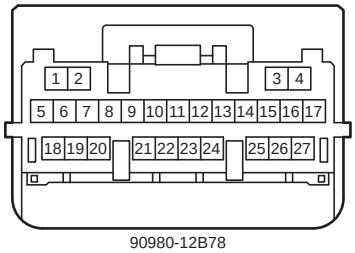

90980-12B78

G81
White

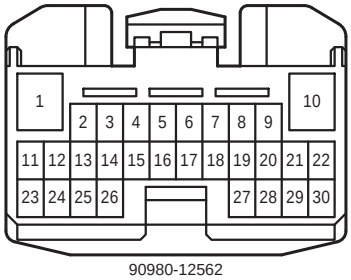

90980-12562

G91
White

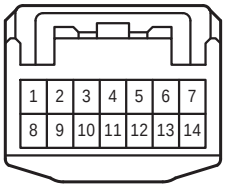

90980-12370

G129
White

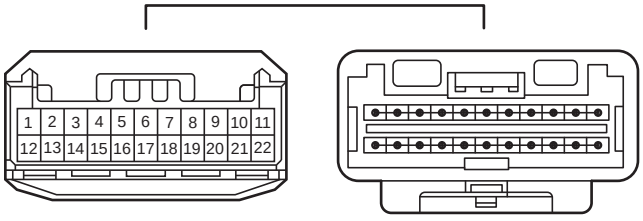

90980-12B54

L118
White

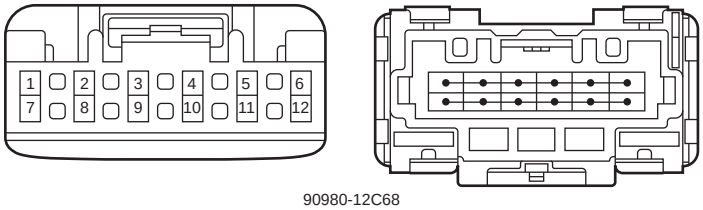

90980-12C68

P6
White

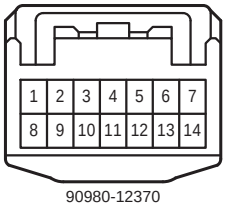

90980-12370

P13

82675-28470

P14

90980-09204

P15

90980-09205

U1

90980-09A81

U2

82675-28470

X1

90980-09D56

X2

90980-09205

1A
White

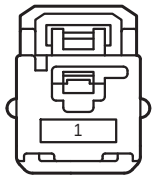

90980-12756

1B
Black

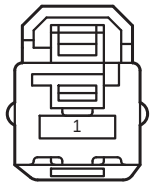

90980-12796

1G

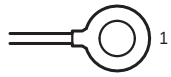

82675-45010

1H

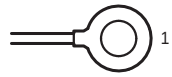

82675-45010

1L

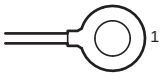

90980-09D55

1M

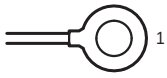

90980-09877

4A
White

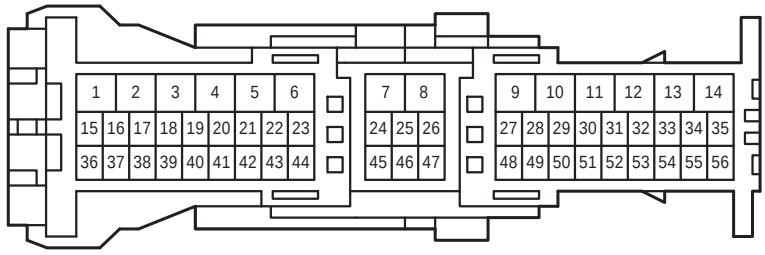

90980-12943

4D
White

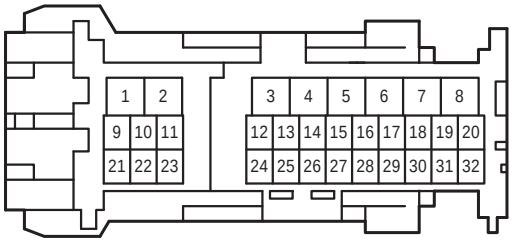

90980-12A48

4F
White

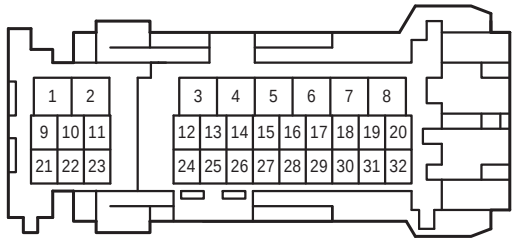

90980-12A47

4H
White

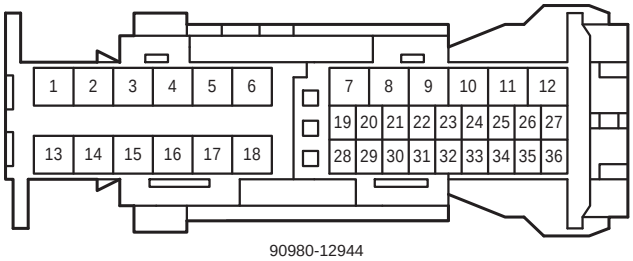

90980-12944

4K
Gray

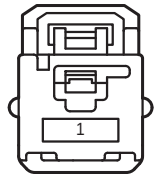

90980-12756

4L
Gray

90980-10995

5A
White

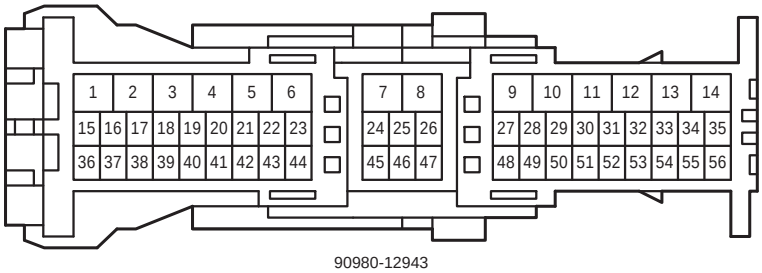

90980-12943

5D
White

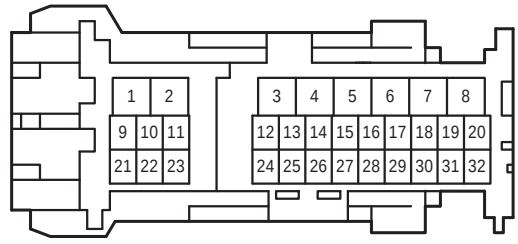

90980-12A48

5F
White

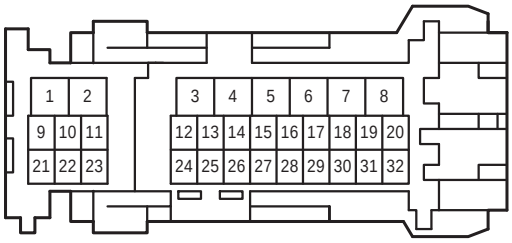

90980-12A47

5K
White

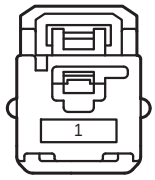

90980-12756

5L
White

90980-10995

6A

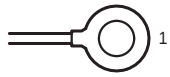

82675-33060

6B

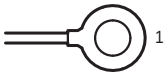

90980-09877

6C

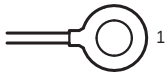

90980-09566

6D
White

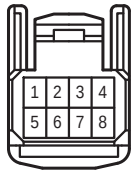

90980-12551

7A
White

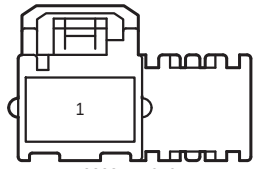

82824-74010

7B
White

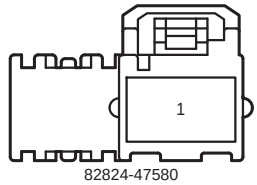

82824-47580

AD1

White

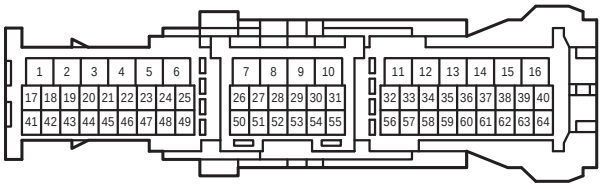

90980-12774

Black

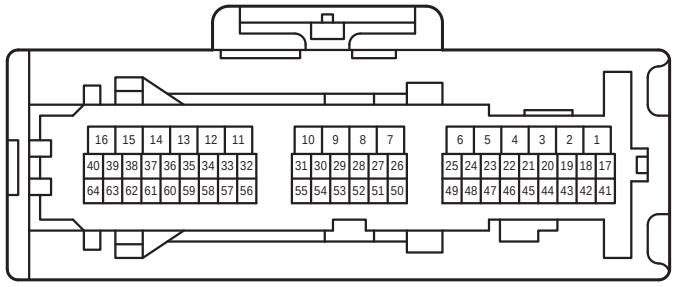

90980-12798

GA4
White

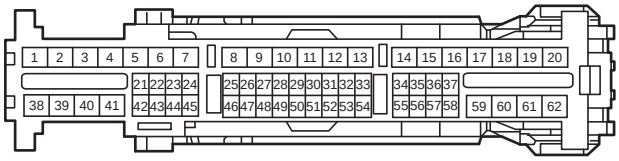

90980-12B22

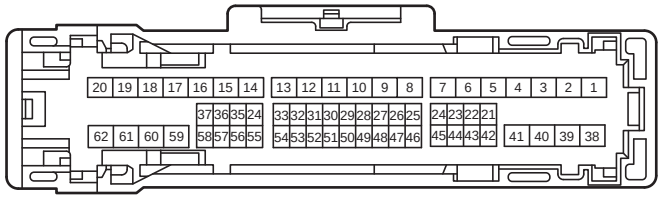

90980-12B21

GL2
White

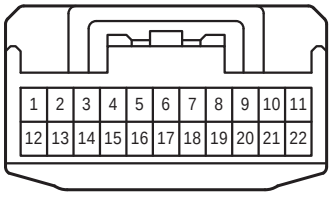

90980-12372

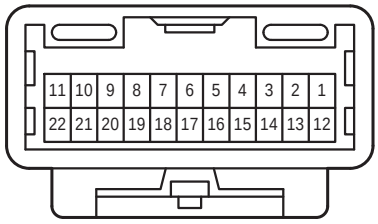

90980-12371

GL4
White

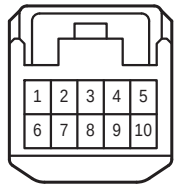

90980-12368

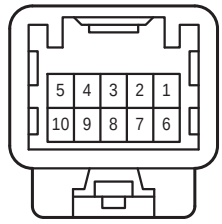

90980-12367

PL1
Gray

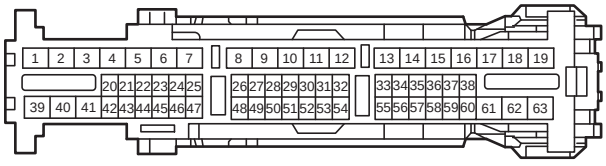

90980-12B20

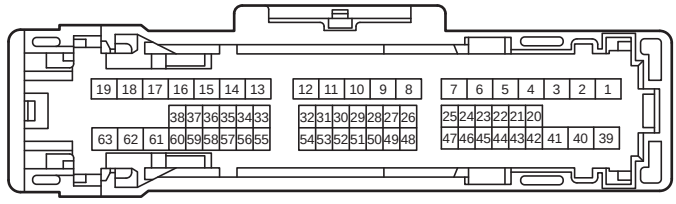

90980-12B19

PL2
White

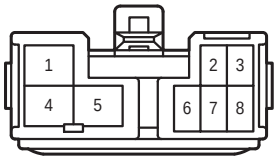

90980-10877

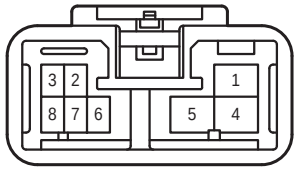

90980-10876

PL3
White

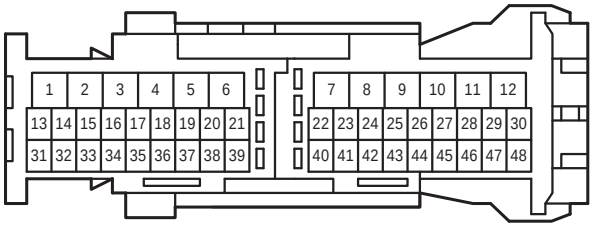

90980-12779

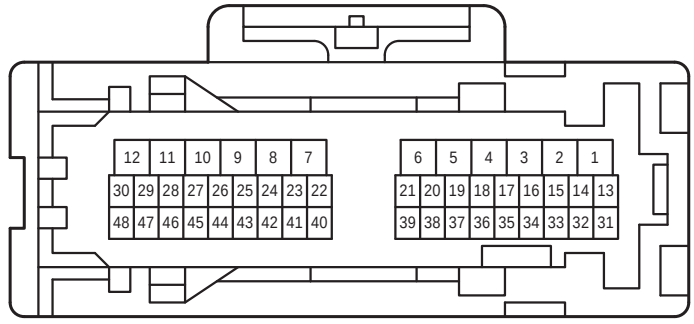

90980-12799