(Cont. next page)

Power Source (12V) (RHD)

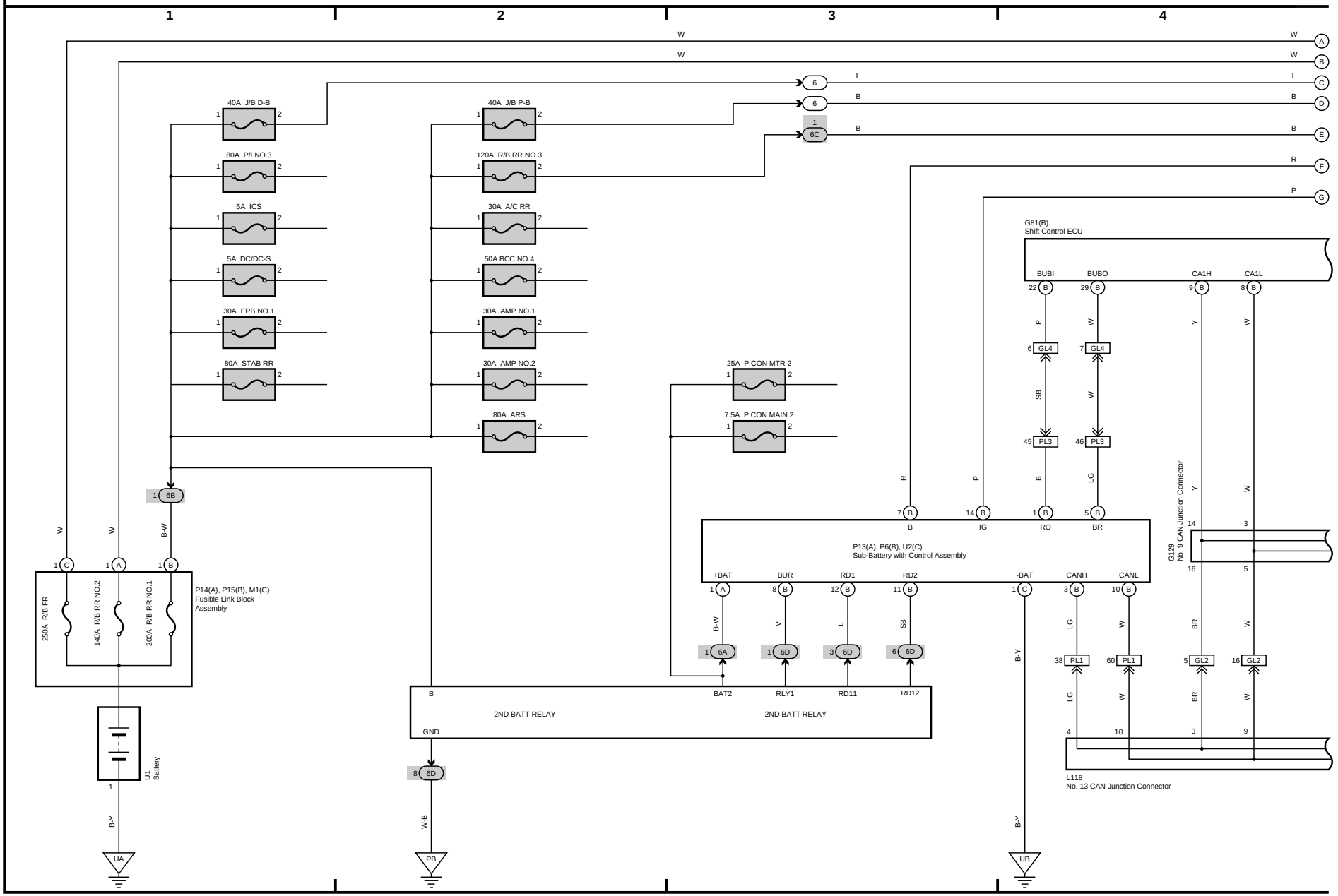

(Cont. next page)

Power Source (12V) (RHD)

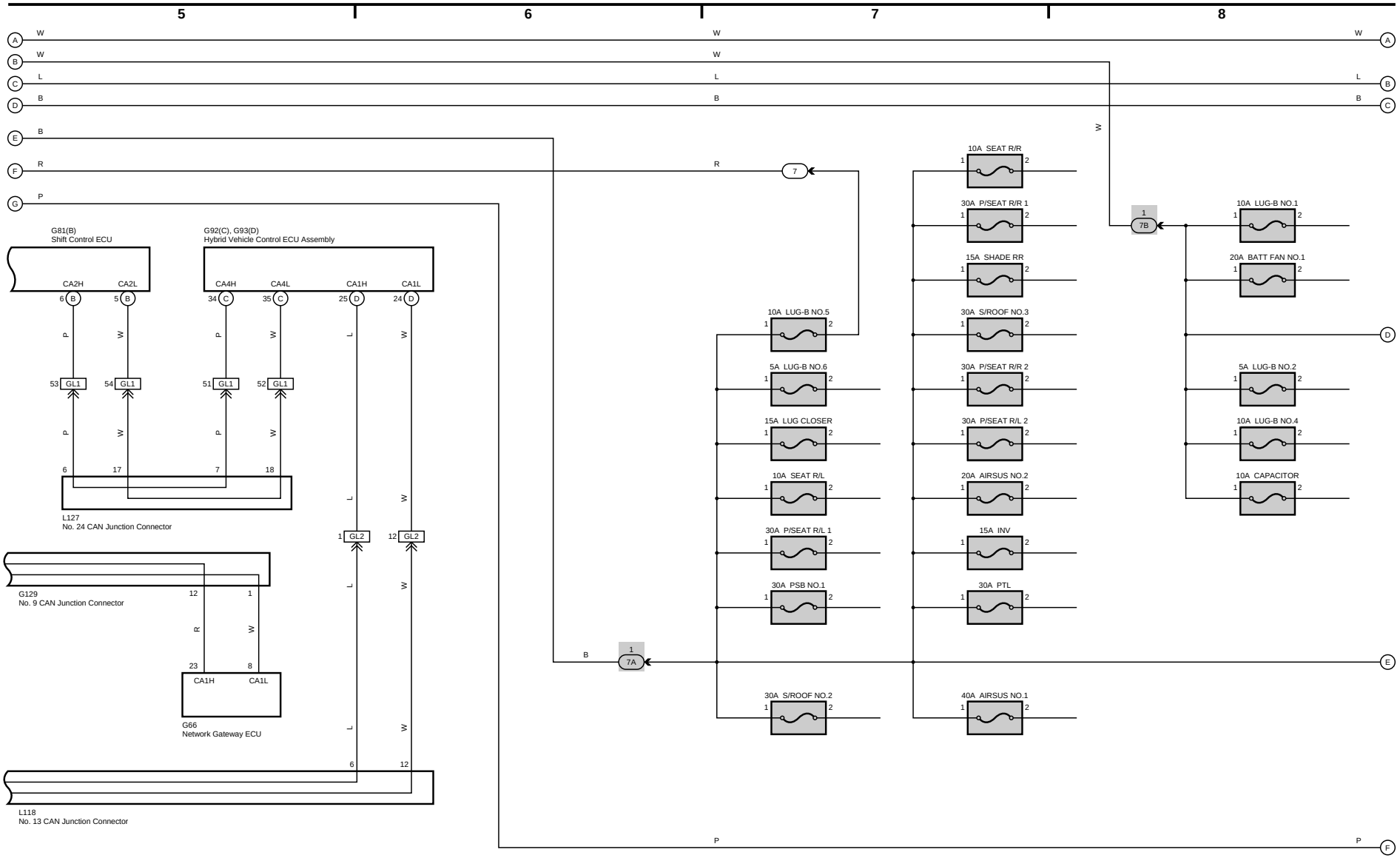

(Cont. next page)

Power Source (12V) (RHD)

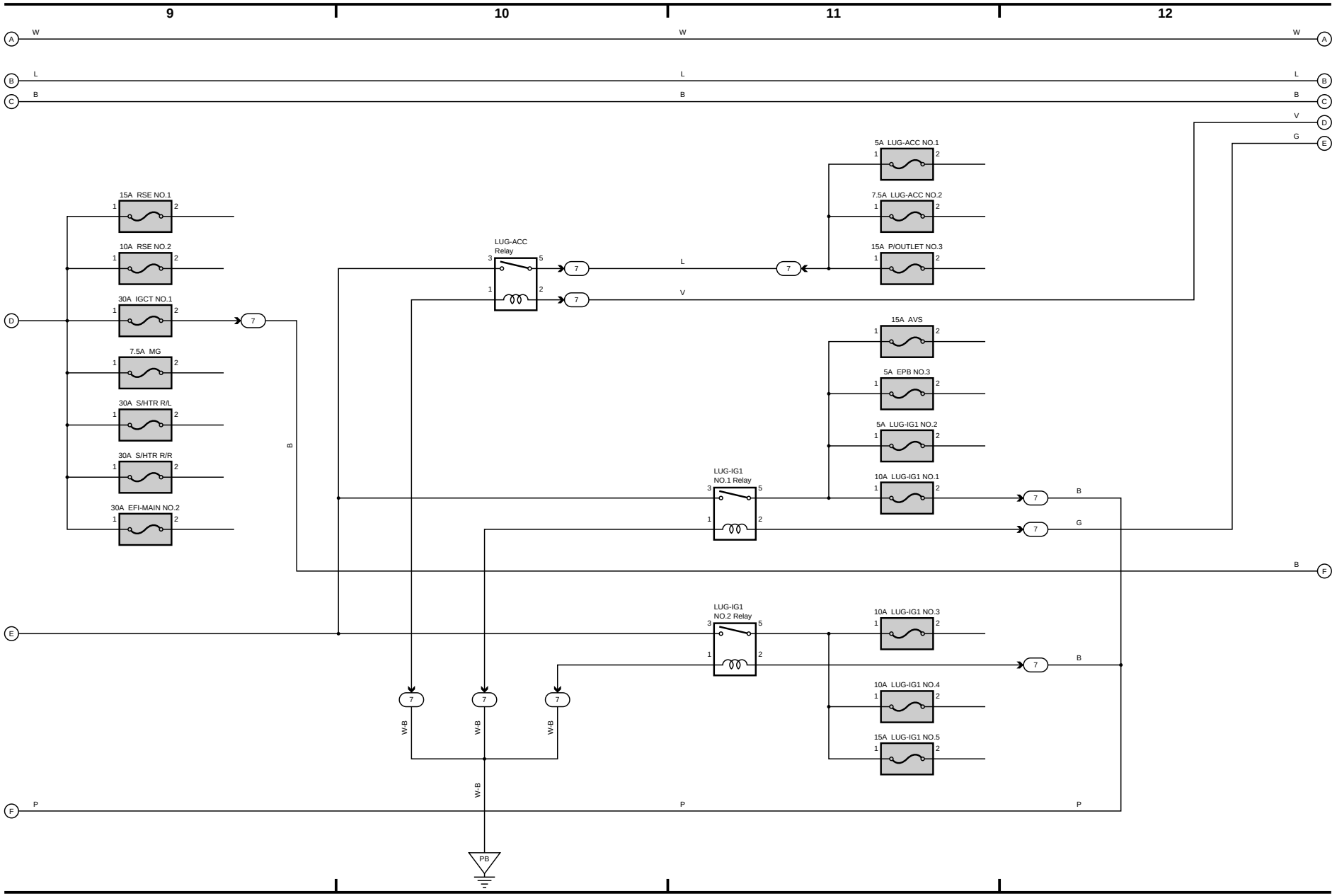

(Cont. next page)

Power Source (12V) (RHD)

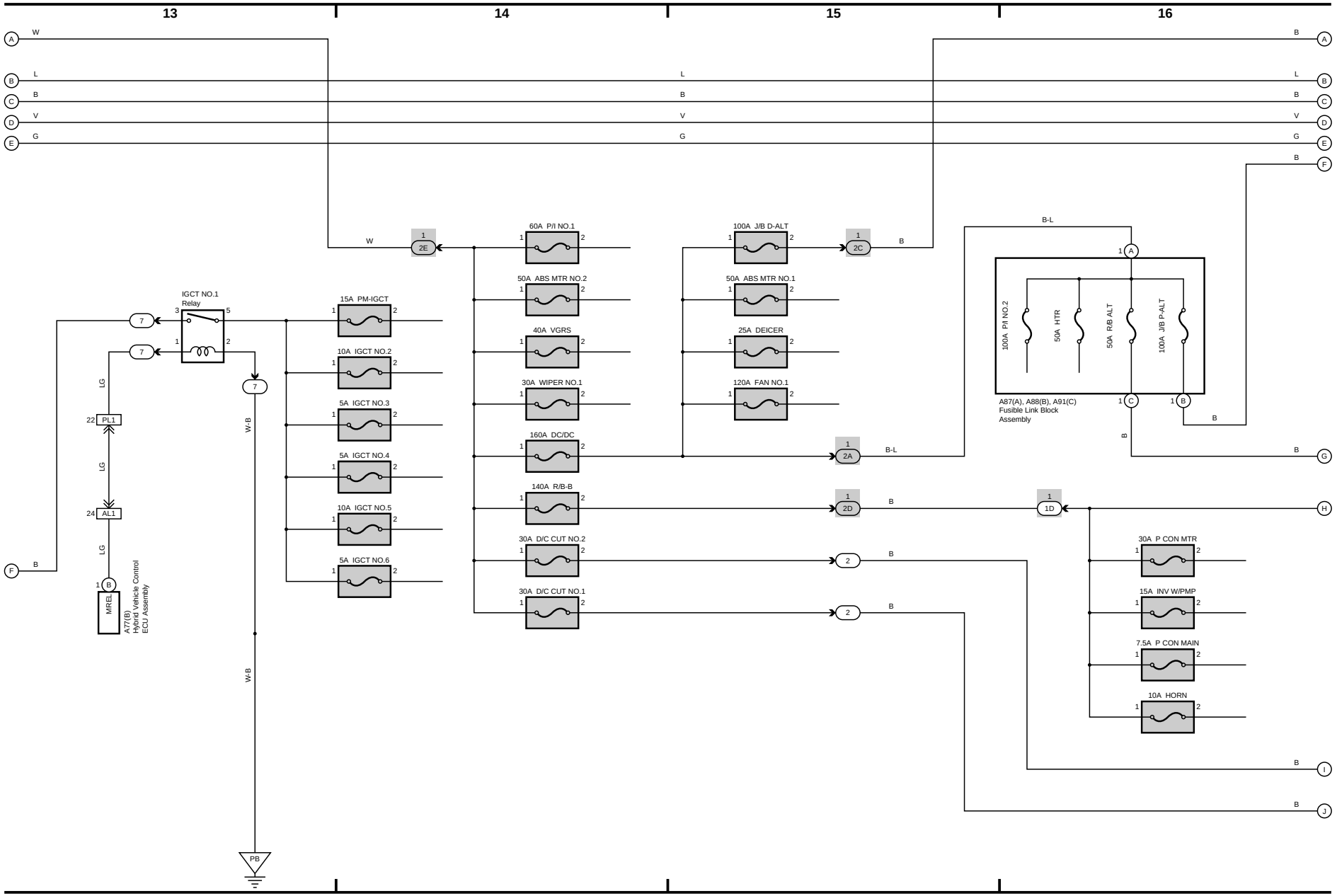

(Cont. next page)

Power Source (12V) (RHD)

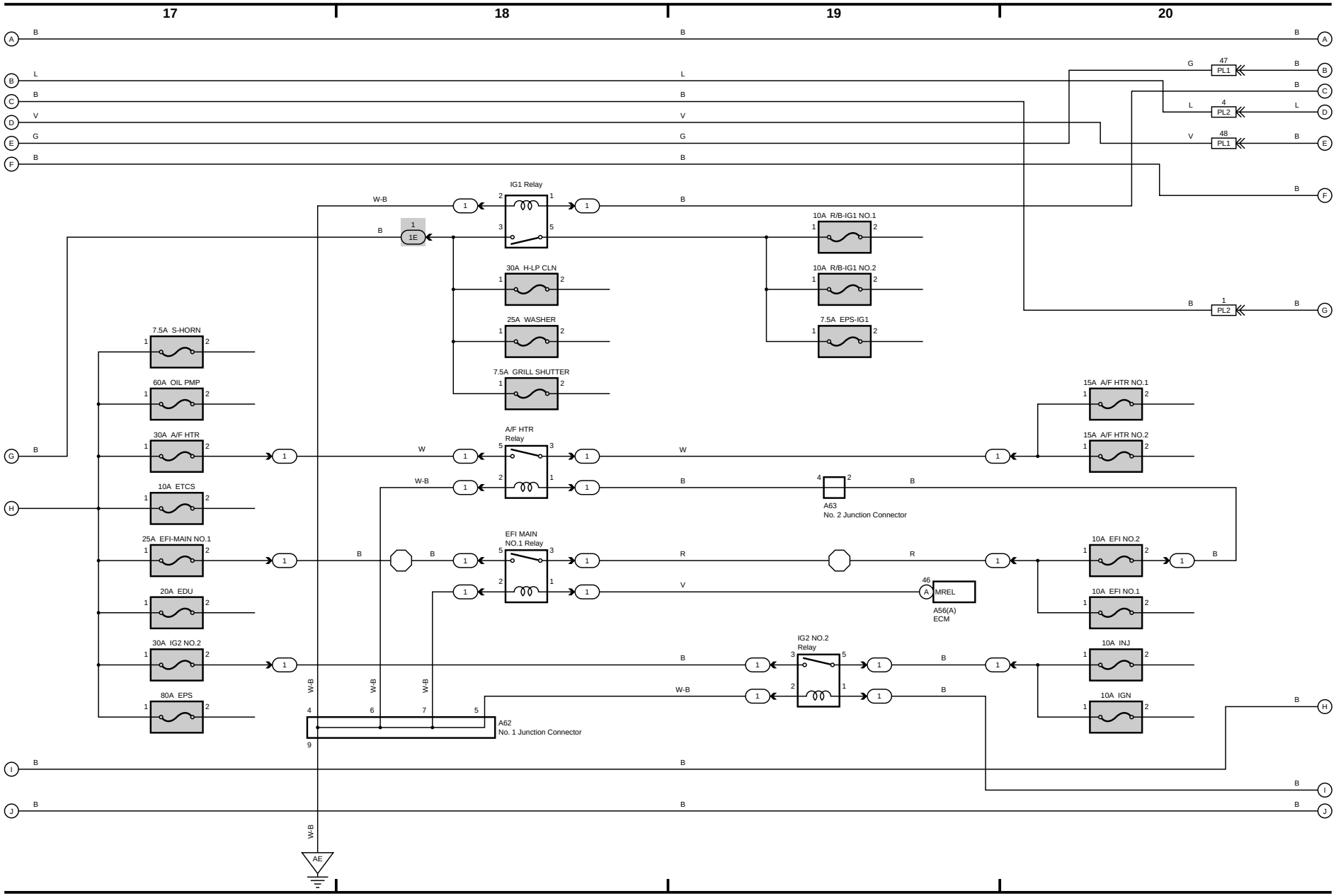

(Cont. next page)

Power Source (12V) (RHD)

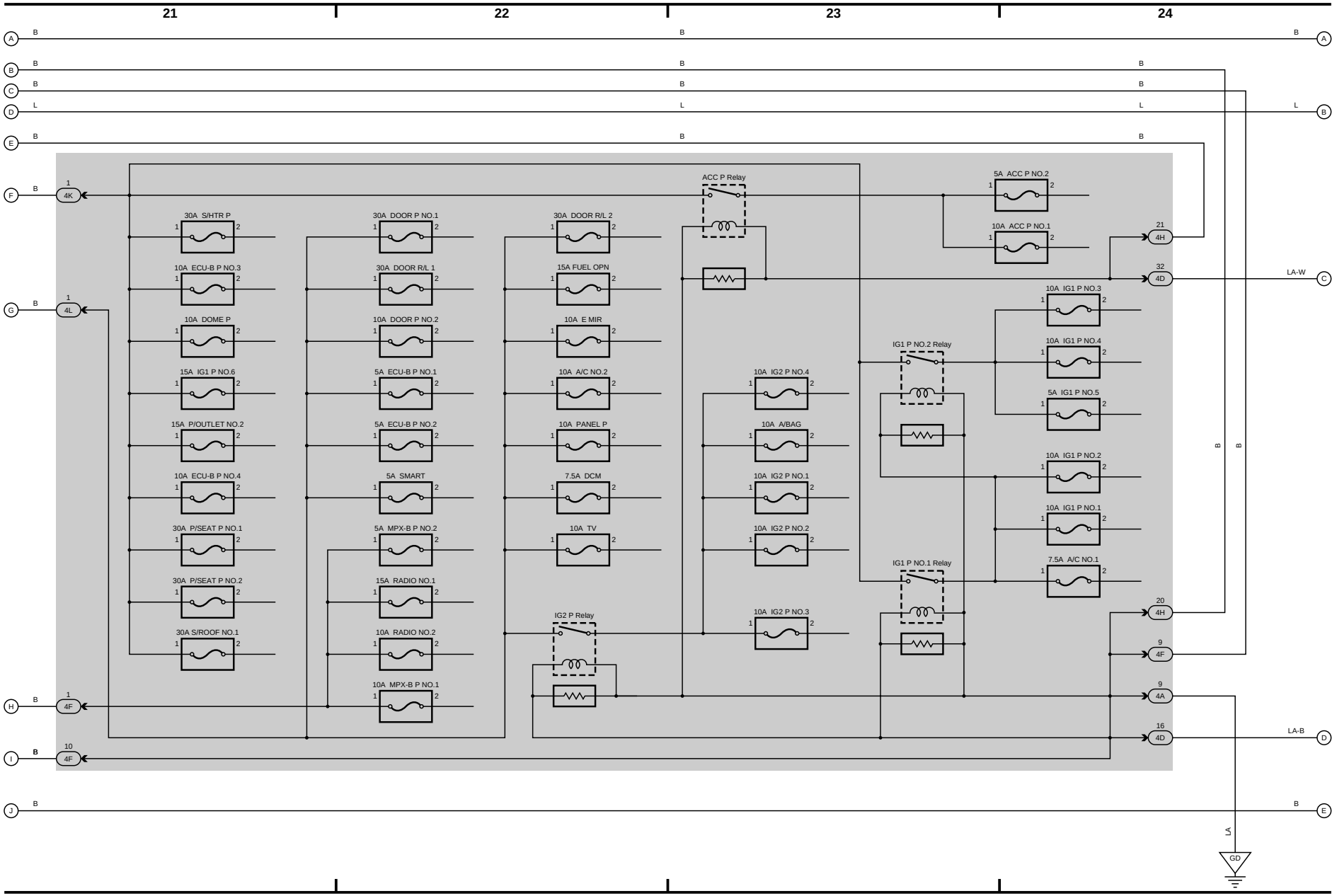

(Cont. next page)

Power Source (12V) (RHD)

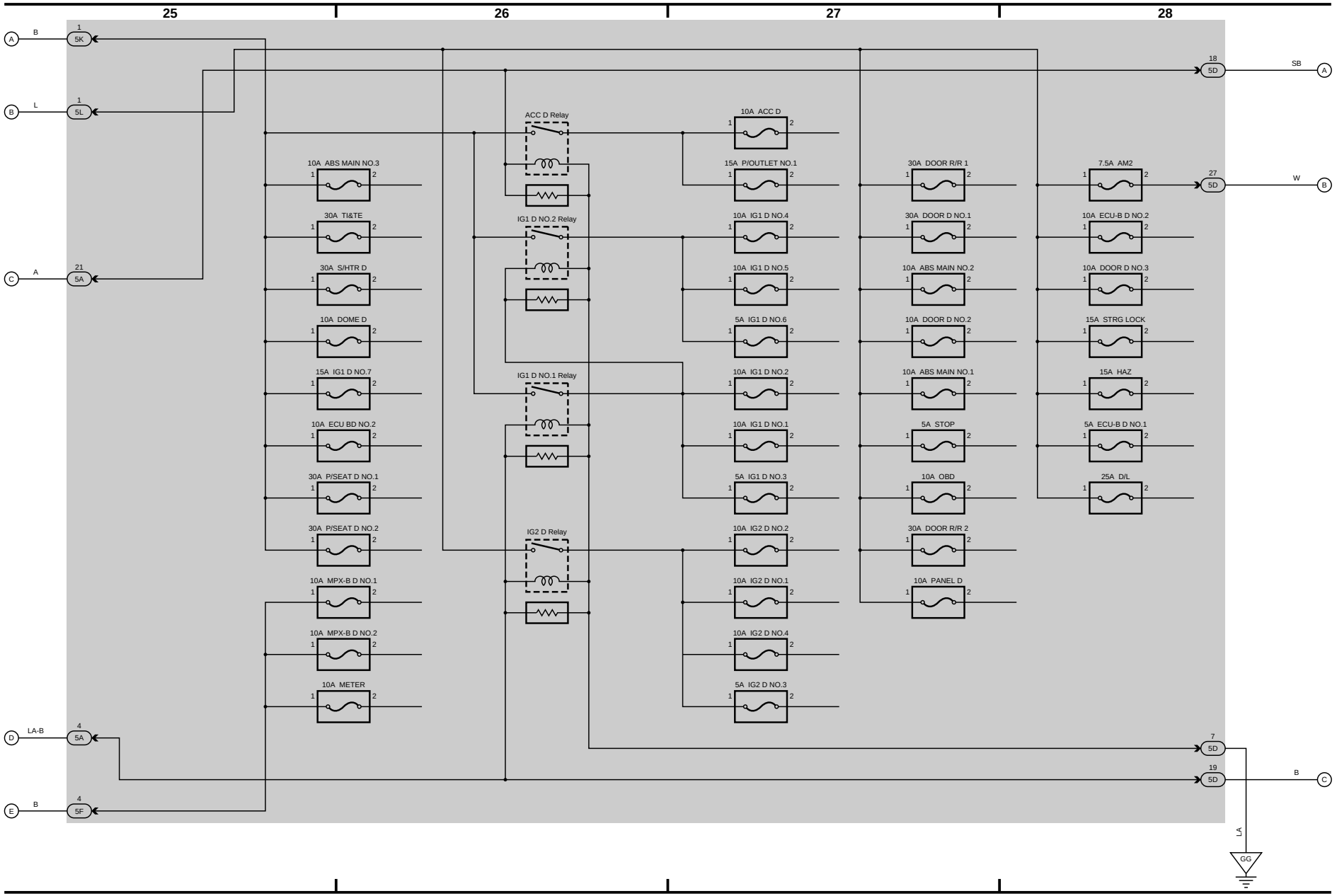
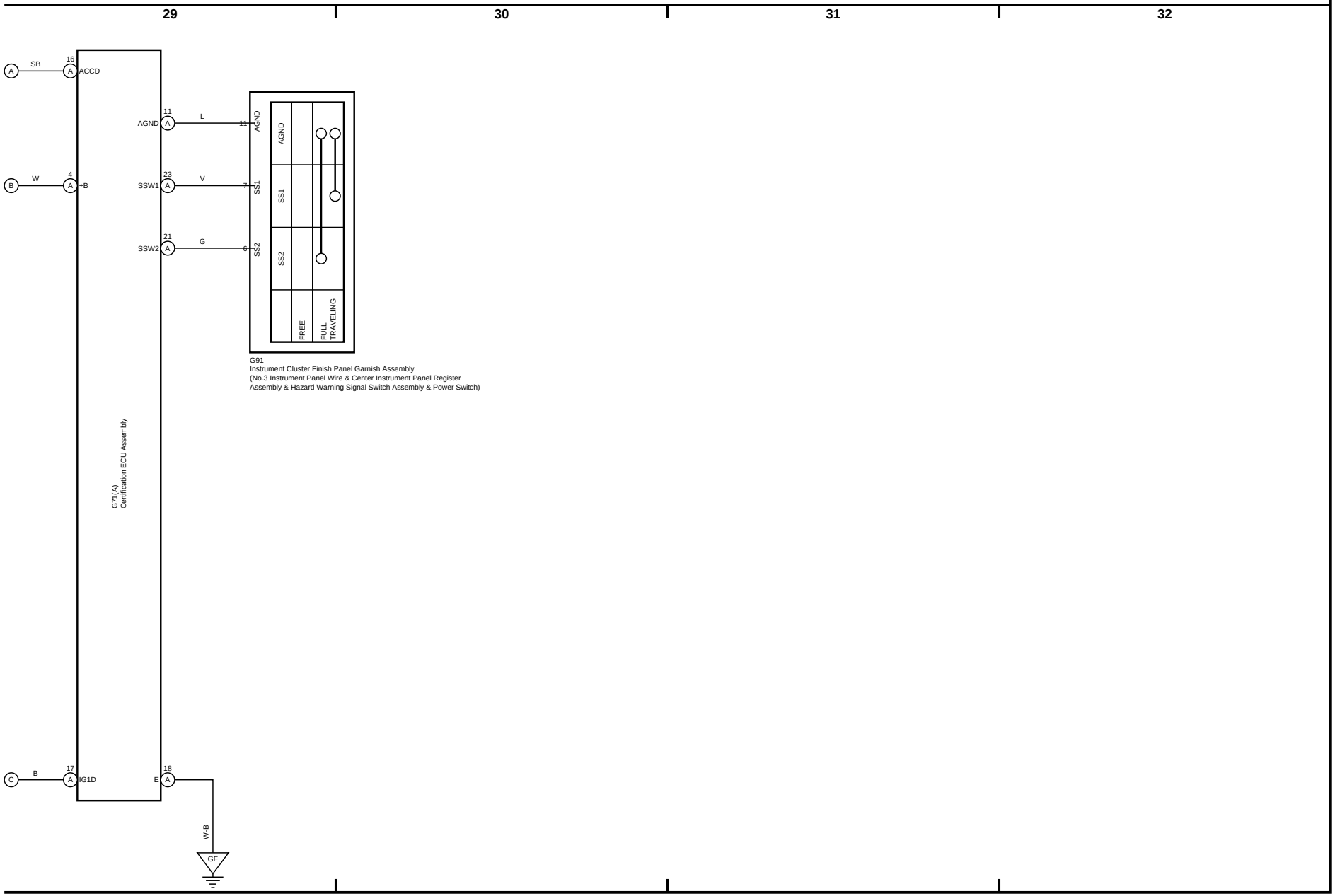
Power Source (12V) (RHD)