(Cont. next page)

Seat Belt Warning (RHD)

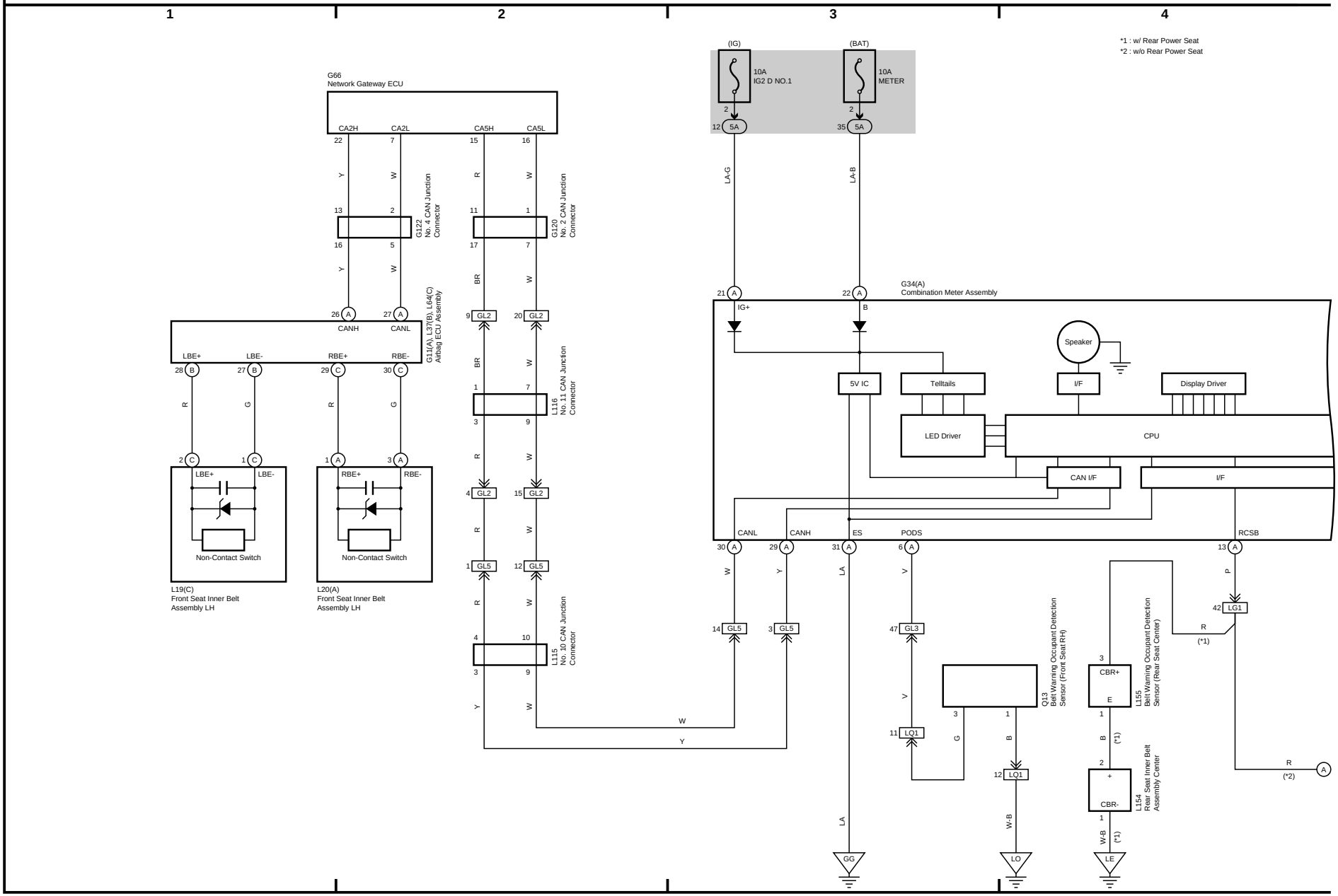
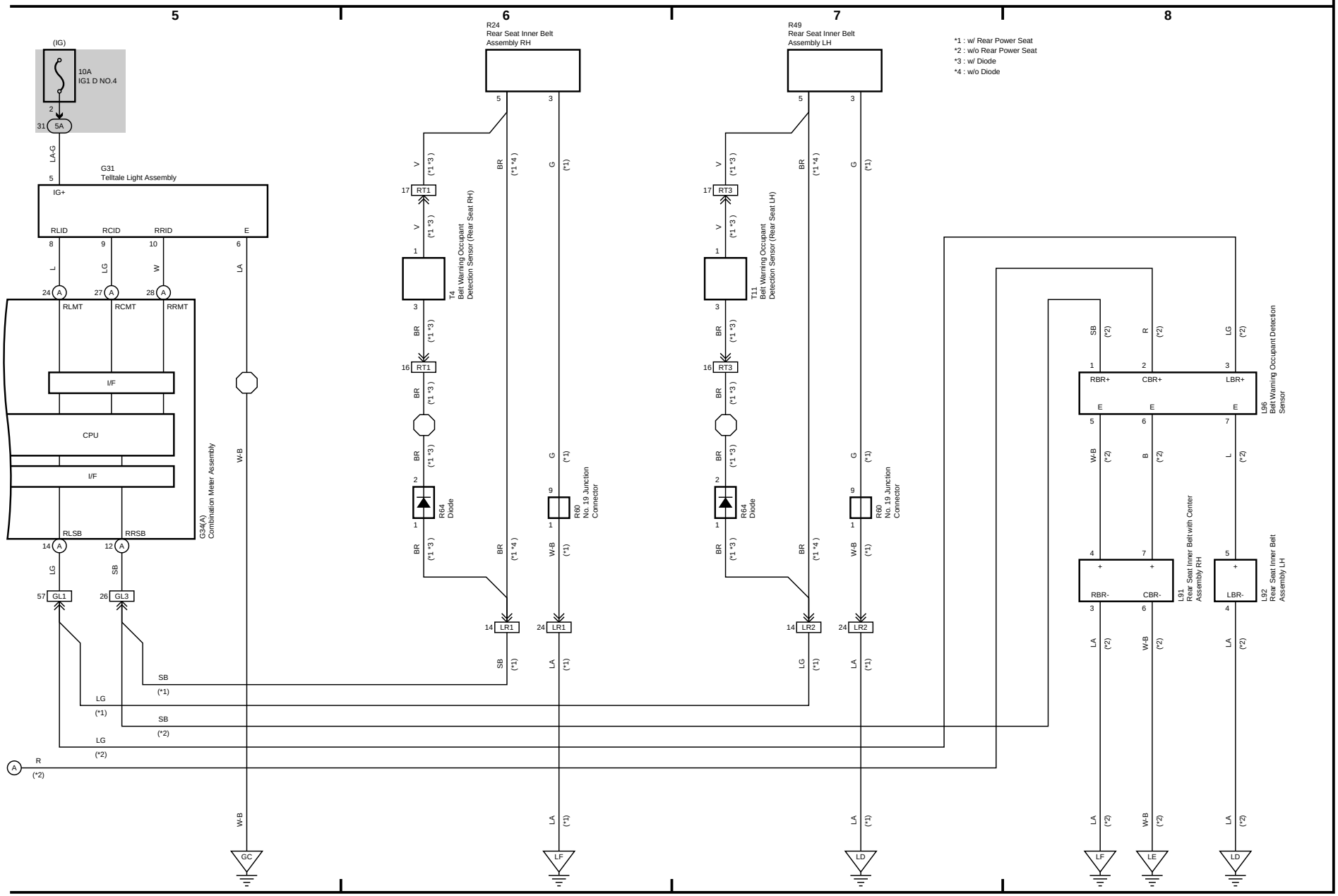
Seat Belt Warning (RHD)