(Cont. next page)

Remote Control Mirror (RHD)

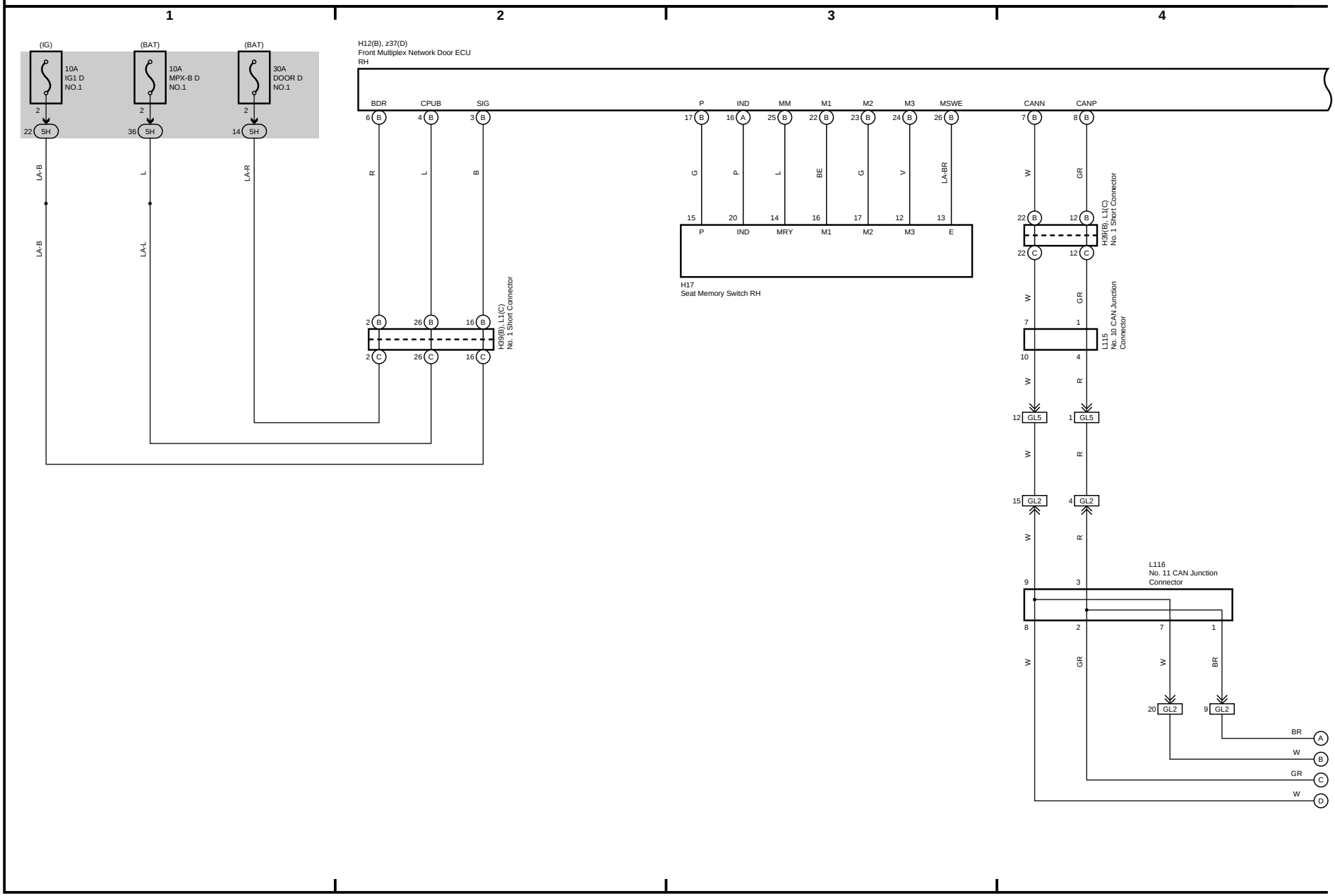

(Cont. next page)

Remote Control Mirror (RHD)

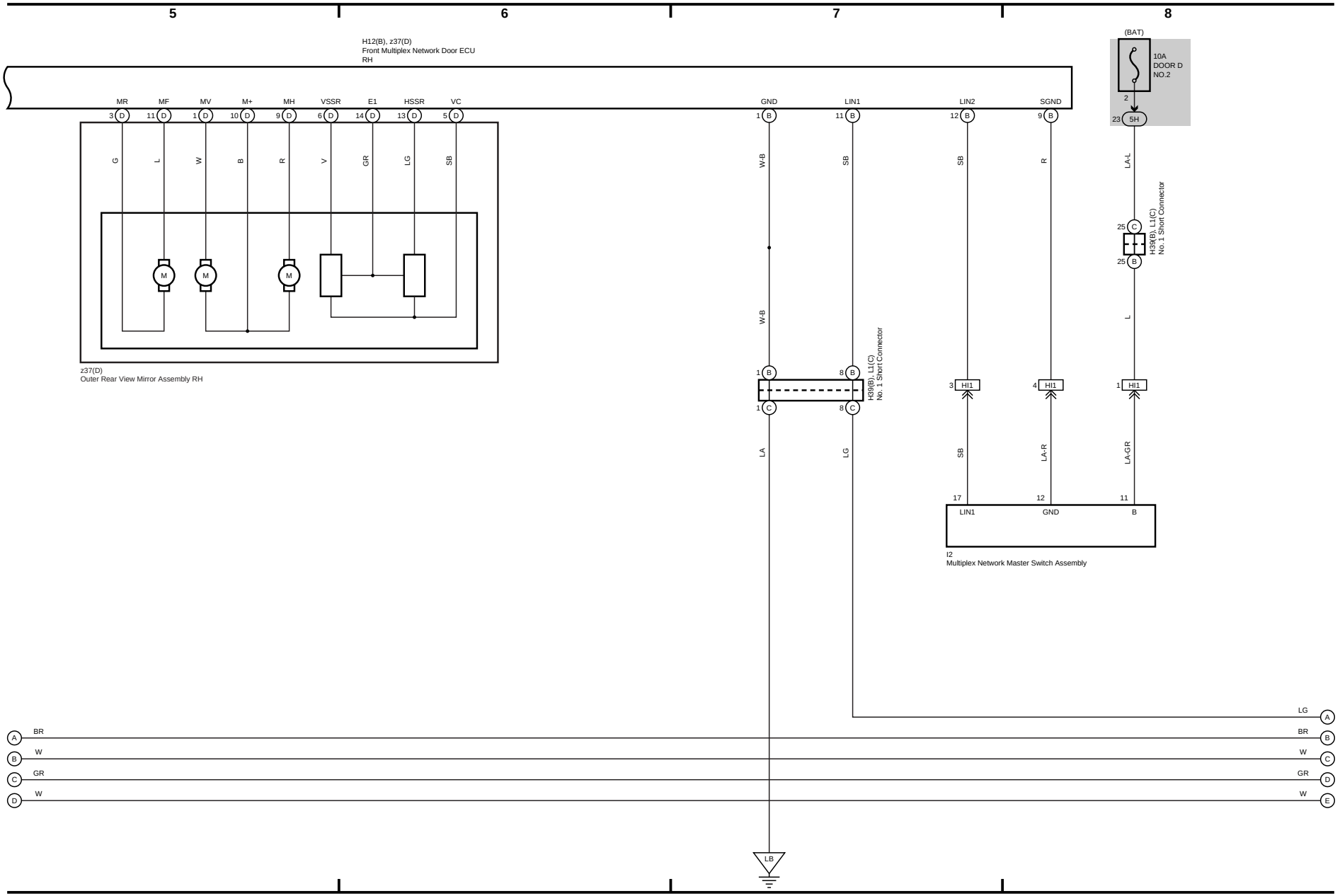

(Cont. next page)

Remote Control Mirror (RHD)

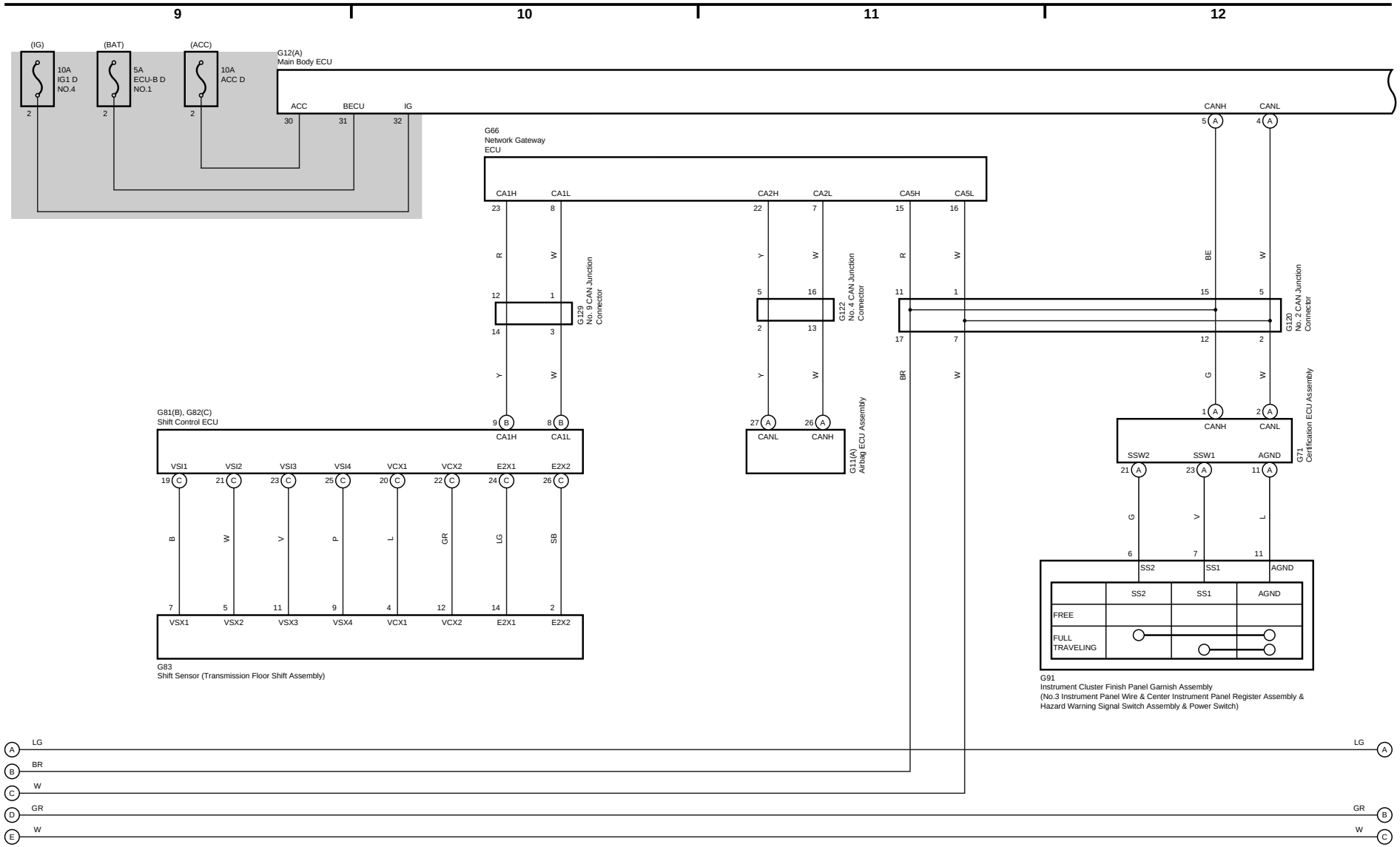

(Cont. next page)

Remote Control Mirror (RHD)

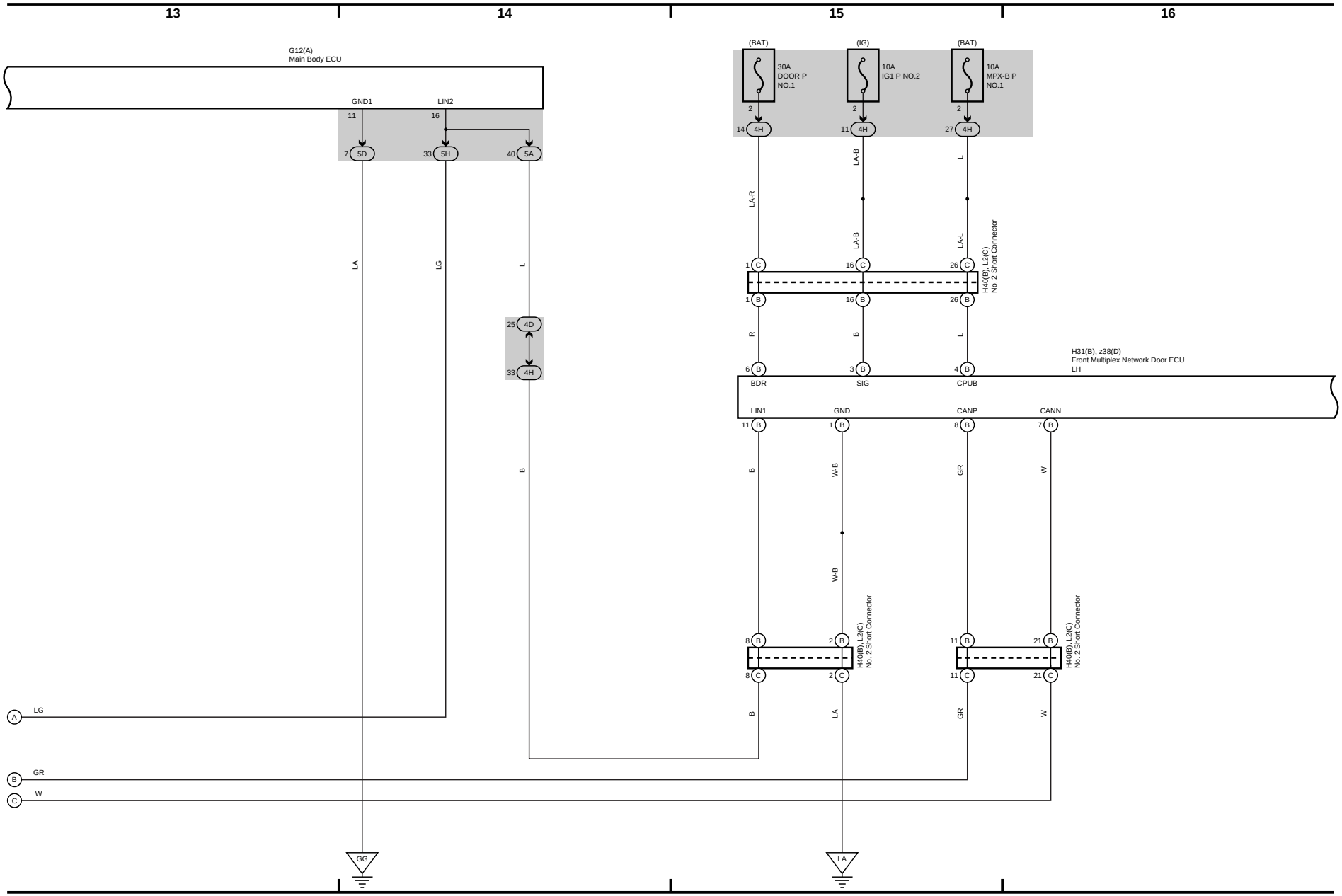

Remote Control Mirror (RHD)
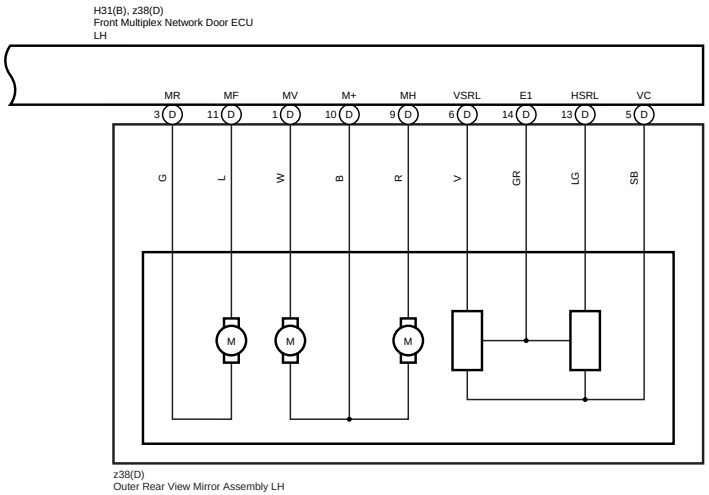
17 | 18 | 19 | 20