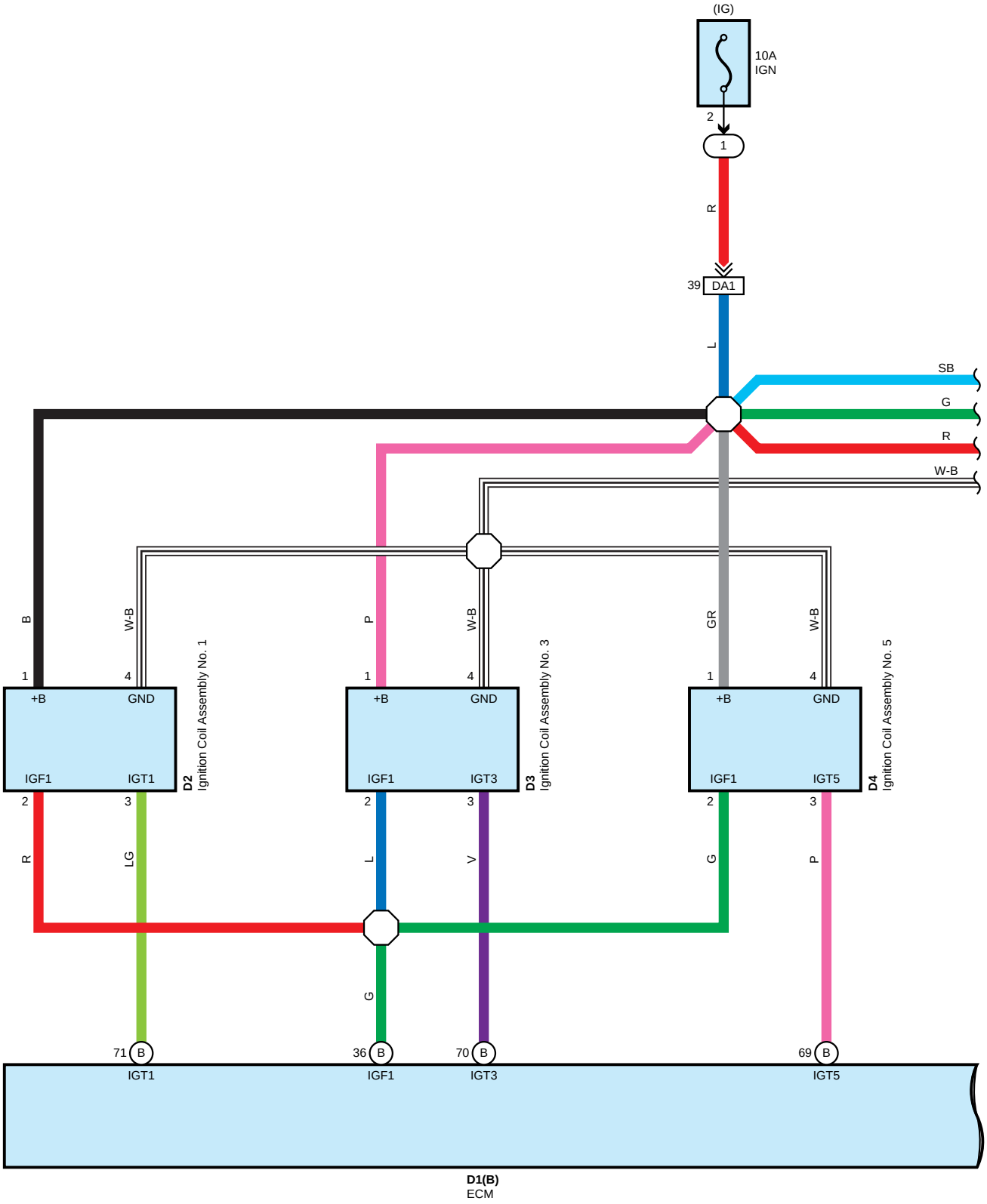
(IG)
10A
IGN
2
1
R
39
DA1
L
SB
G
R
W-B
B
W-B
P
W-B
GR
W-B
1
4
+B
GND
IGF1
IGT1
2
3
D2
Ignition Coil Assembly No. 1
1
4
+B
GND
IGF1
IGT3
2
3
D3
Ignition Coil Assembly No. 3
1
4
+B
GND
IGF1
IGT5
2
3
D4
Ignition Coil Assembly No. 5
R
LG
L
V
G
P
G
71
B
IGT1
36
B
IGF1
70
B
IGT3
69
B
IGT5
D1(B)
ECM

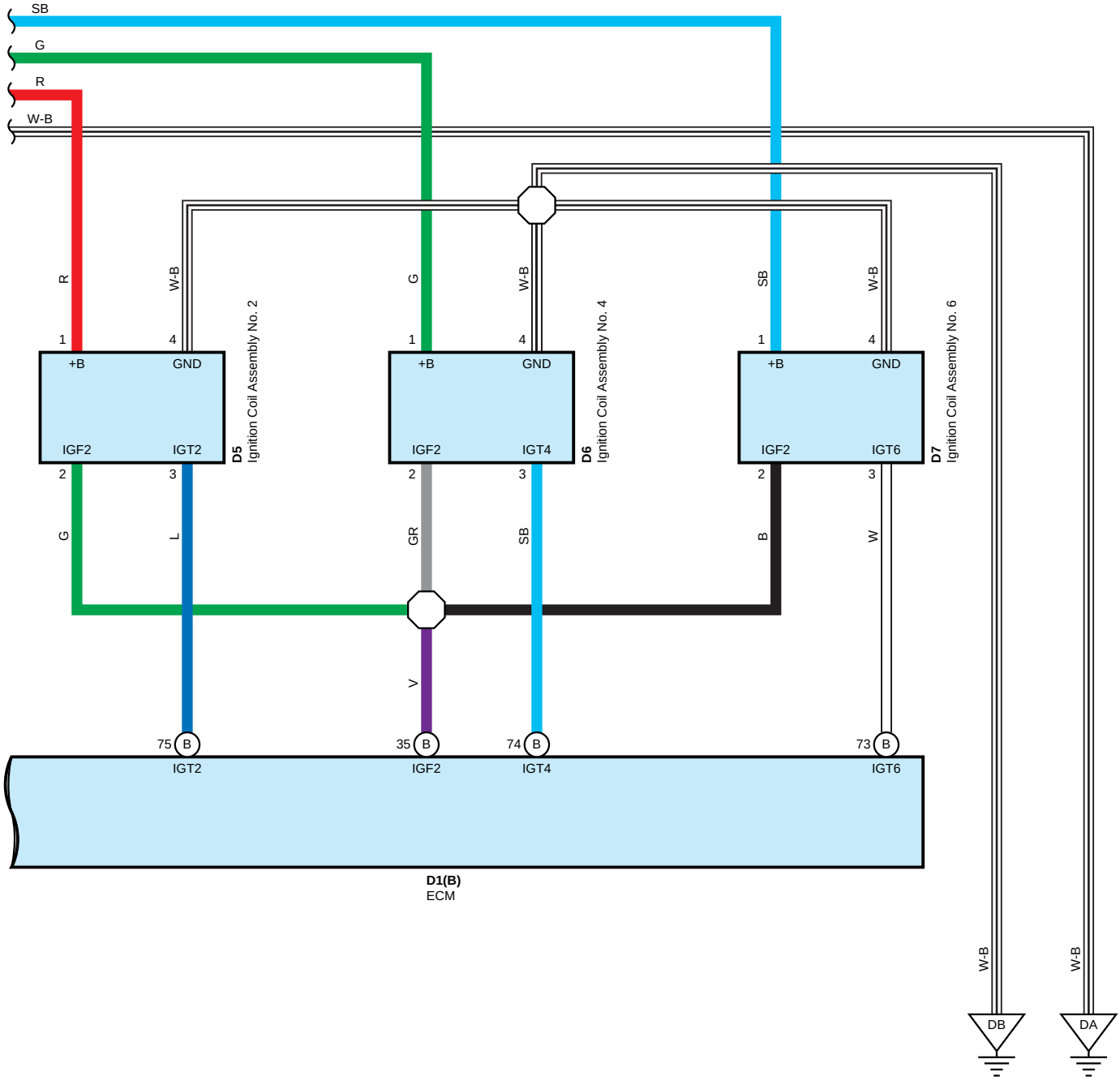
SB
G
R
W-B
R
W-B
G
W-B
SB
W-B
1
4
1
4
1
4
+B
GND
+B
GND
+B
GND
IGF2
IGT2
IGF2
IGT4
IGF2
IGT6
D5
Ignition Coil Assembly No. 2
D6
Ignition Coil Assembly No. 4
D7
Ignition Coil Assembly No. 6
2
3
2
3
2
3
G
L
GR
SB
B
W
V
75 B
35 B
74 B
73 B
IGT2
IGF2
IGT4
IGT6
D1(B)
ECM
W-B
W-B
DB
DA

D1
Black

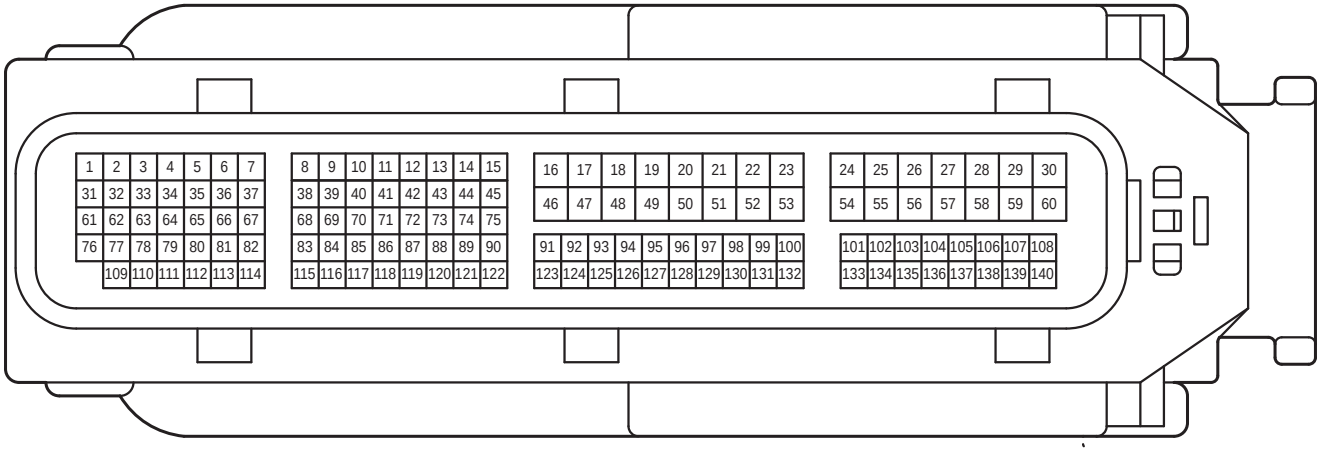

90980-12966

D2
Gray

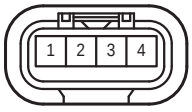

90980-12A29

D3
Black

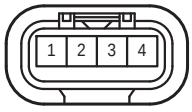

90980-12A29

D4
Gray

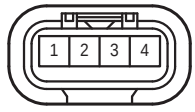

90980-12A29

D5
Black

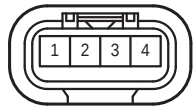

90980-12A29

D6
Gray

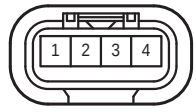

90980-12A29

D7
Black

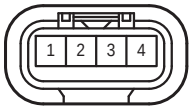

90980-12A29

DA1
White

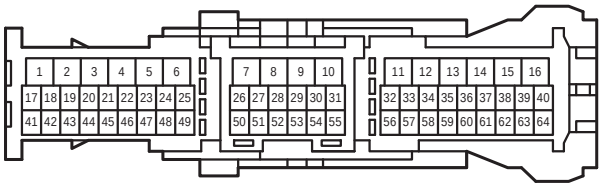

90980-12774

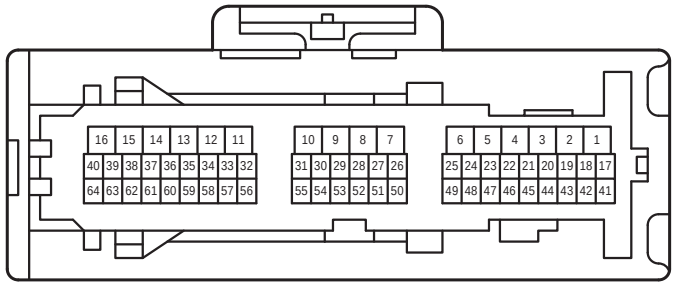

90980-12798