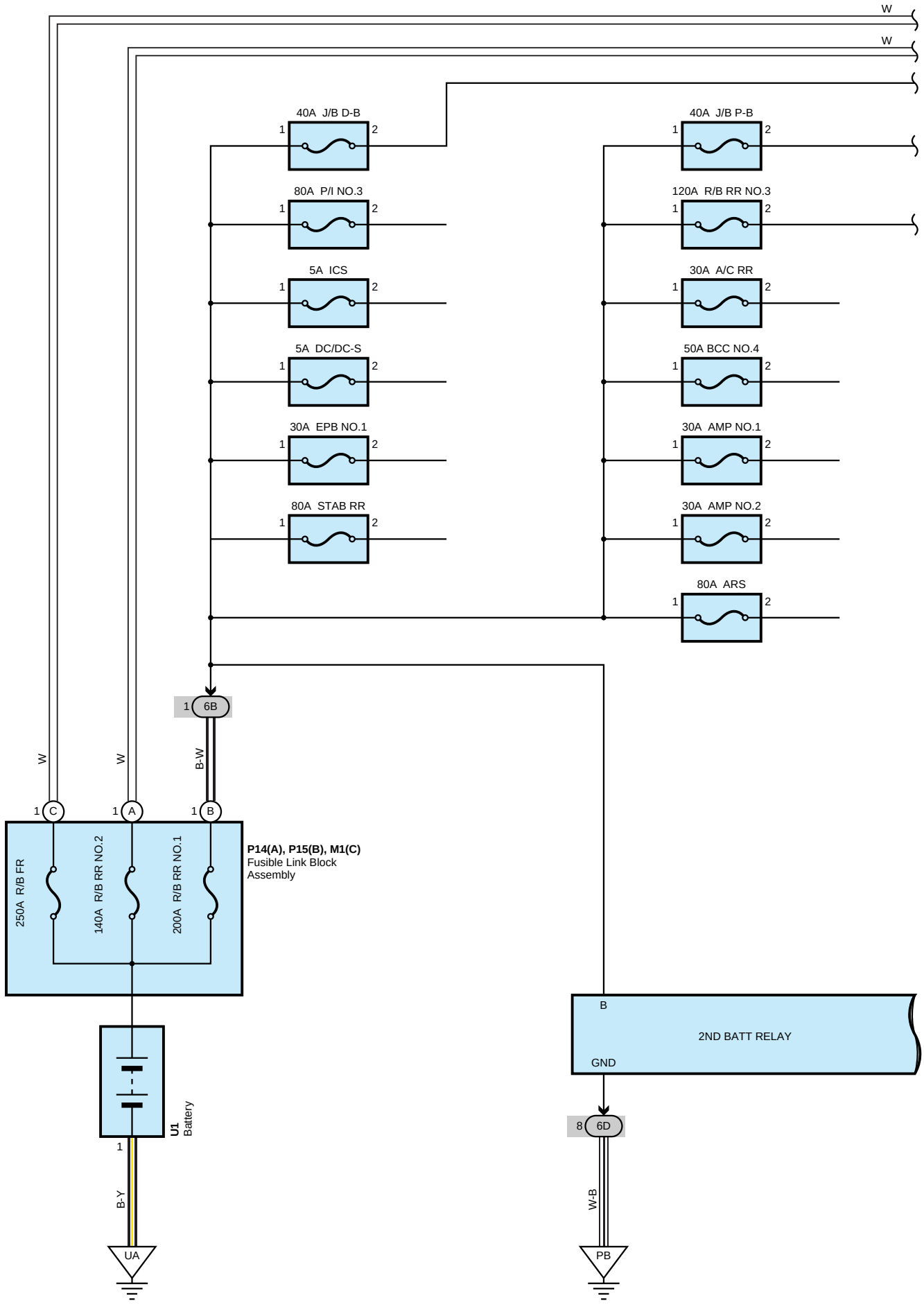
W
W
40A J/B D-B
80A P/I NO.3
5A ICS
5A DC/DC-S
30A EPB NO.1
80A STAB RR
40A J/B P-B
120A R/B RR NO.3
30A A/C RR
50A BCC NO.4
30A AMP NO.1
30A AMP NO.2
80A ARS
1 6B
B-W
W
W
1 C
1 A
1 B
250A R/B FR
140A R/B RR NO.2
200A R/B RR NO.1
P14(A), P15(B), M1(C)
Fusible Link Block
Assembly
U1
Battery
1
B-Y
UA
B
2ND BATT RELAY
GND
8 6D
W-B
PB

Power Source (12V) (LHD)

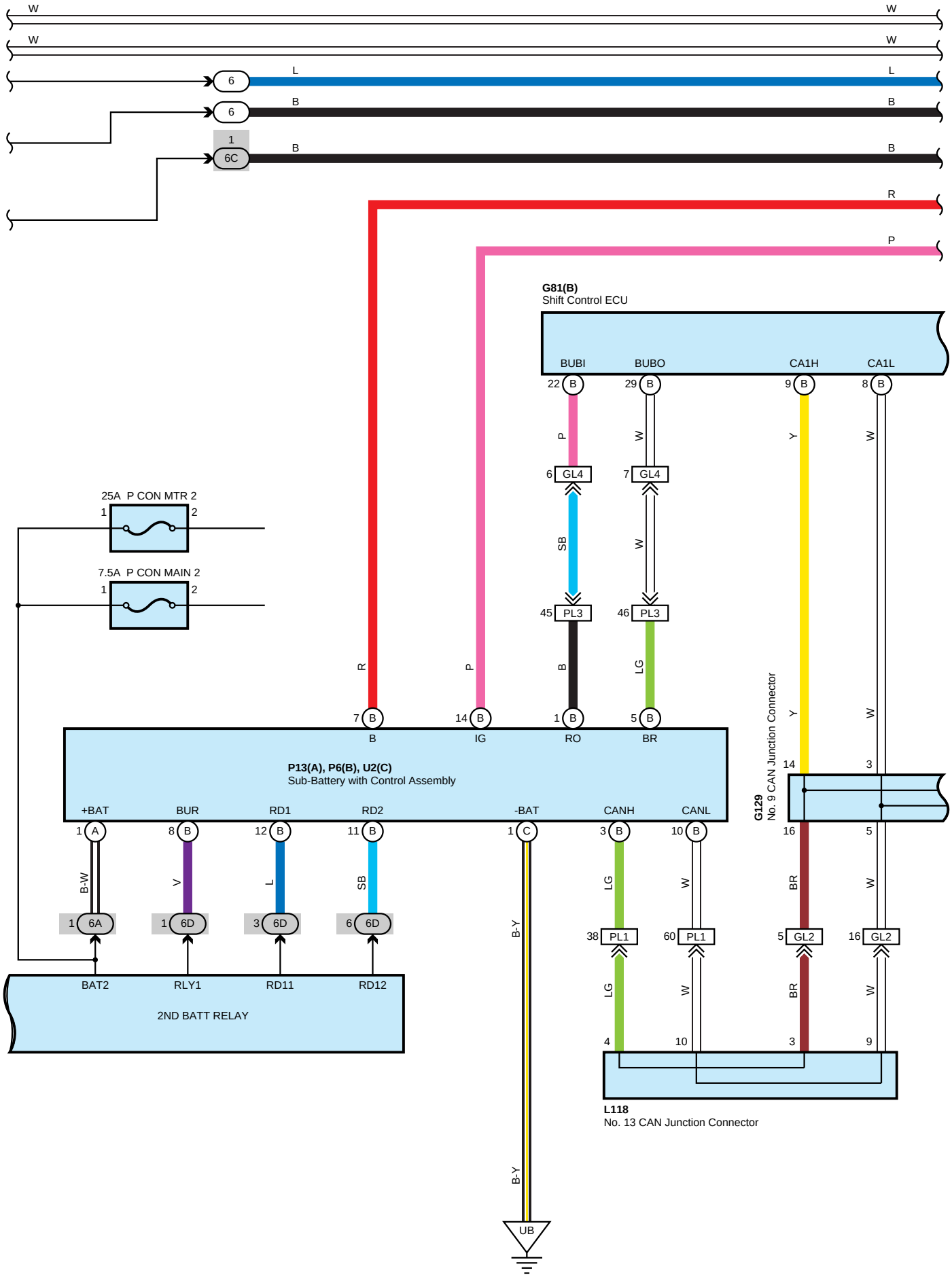

Power Source (12V) (LHD)

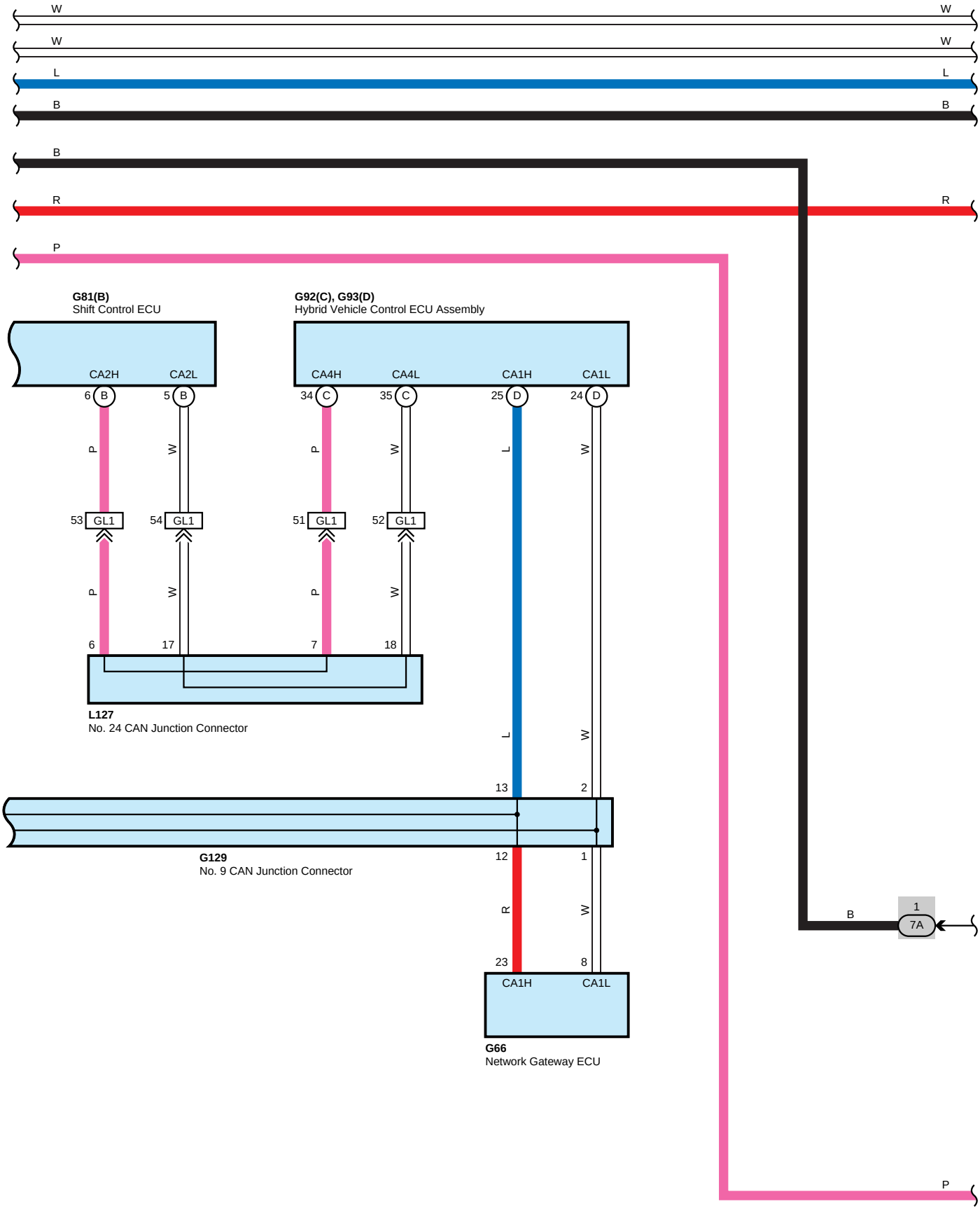

Power Source (12V) (LHD)

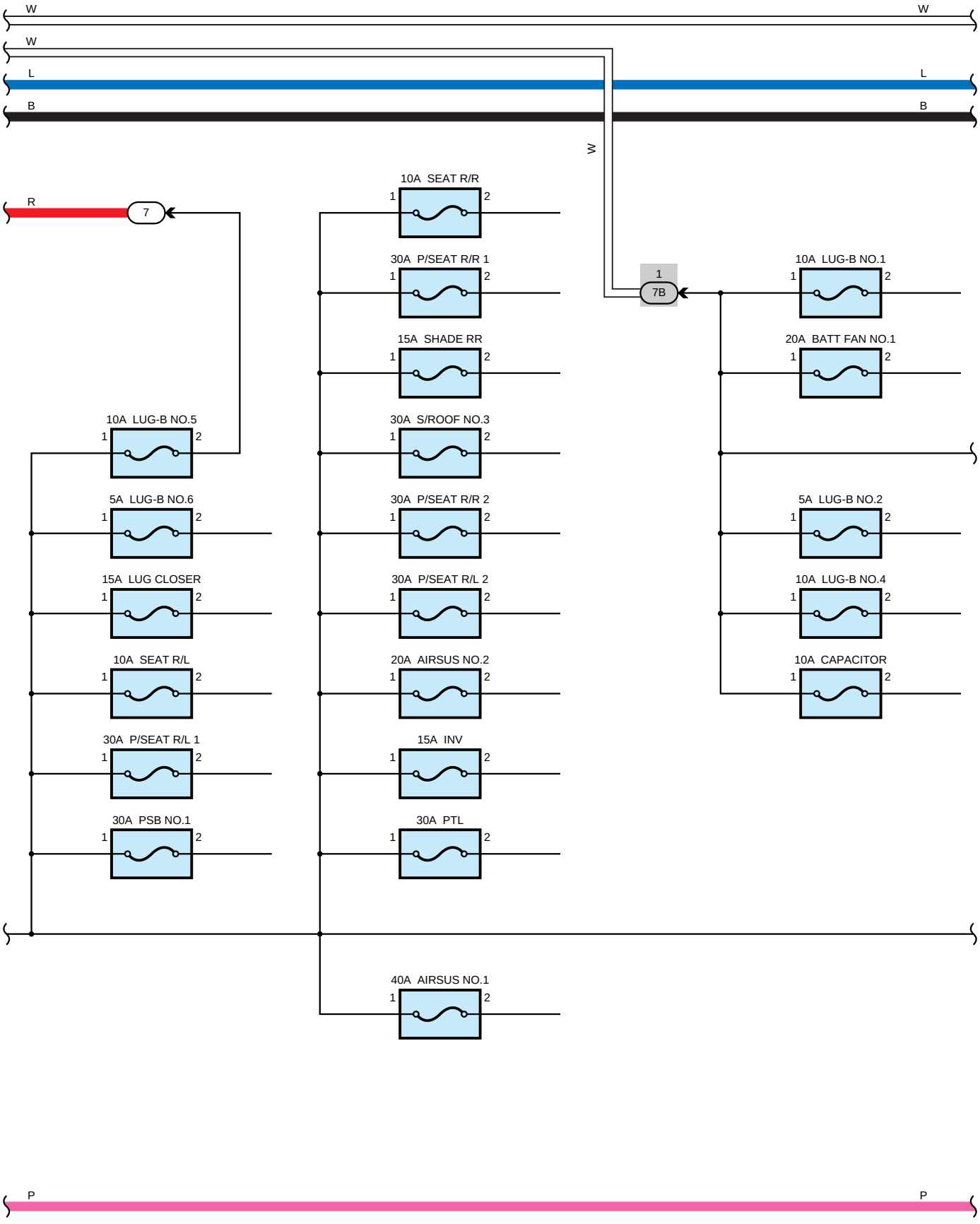

Power Source (12V) (LHD)

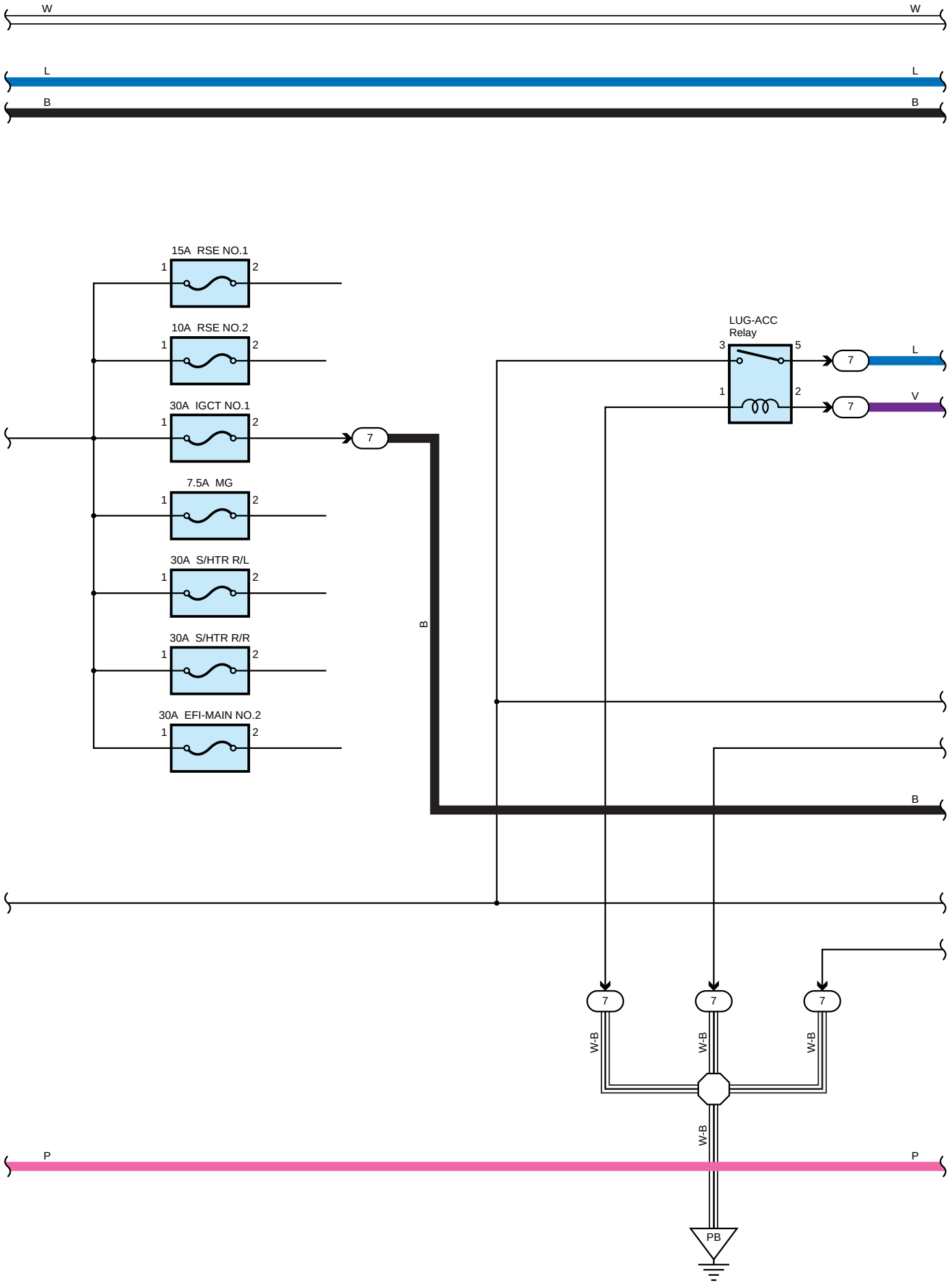

Power Source (12V) (LHD)

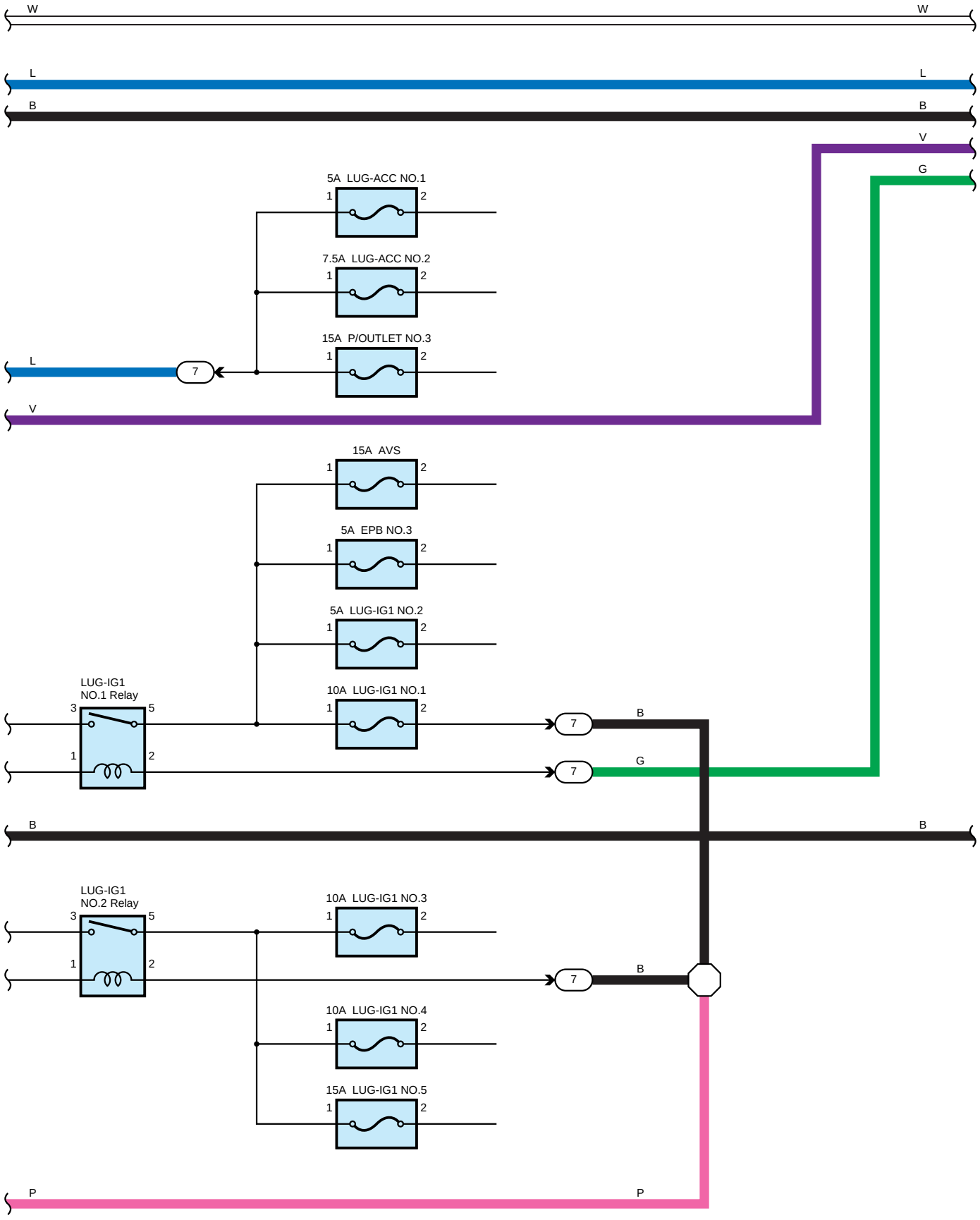

Power Source (12V) (LHD)

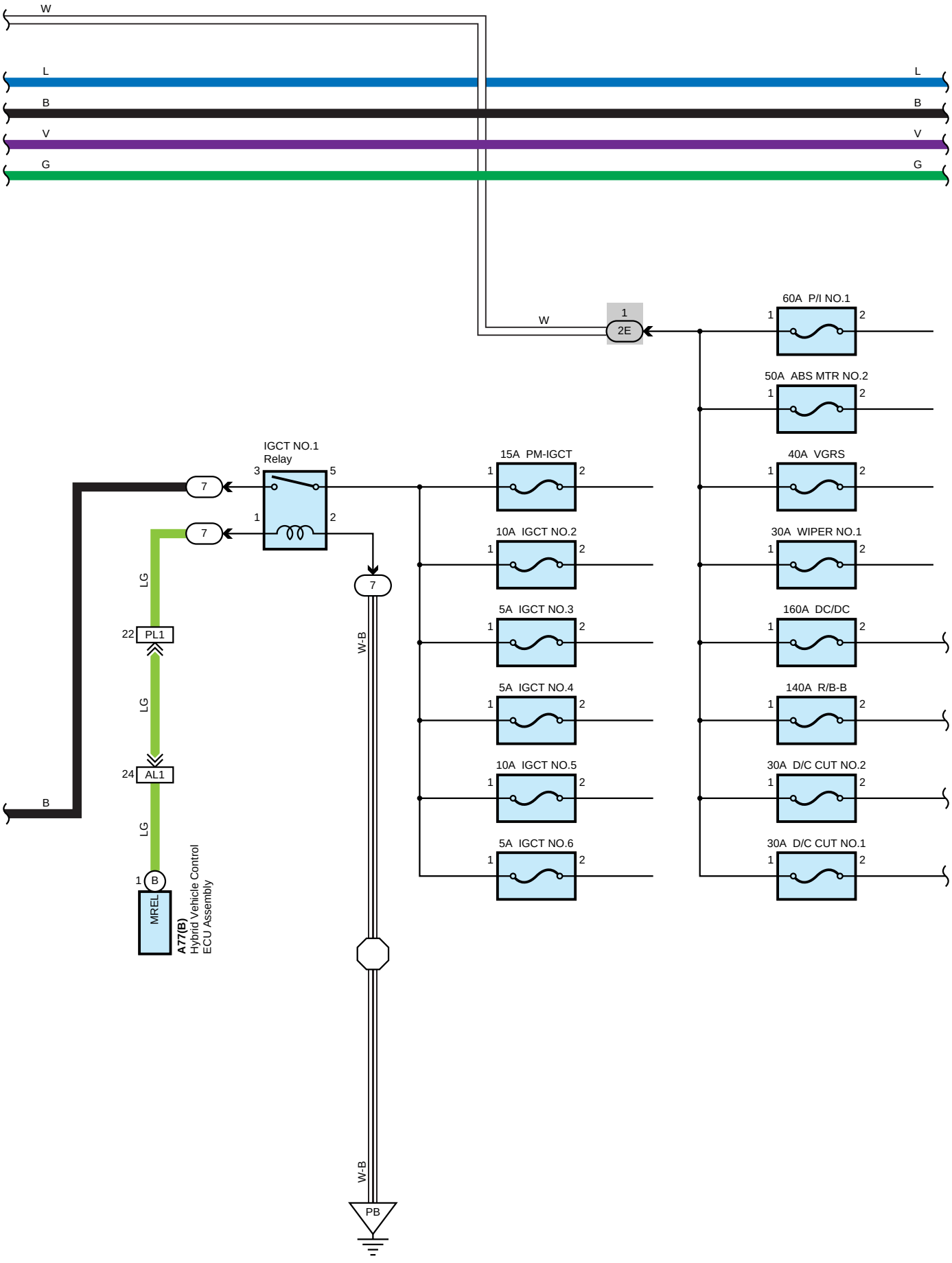

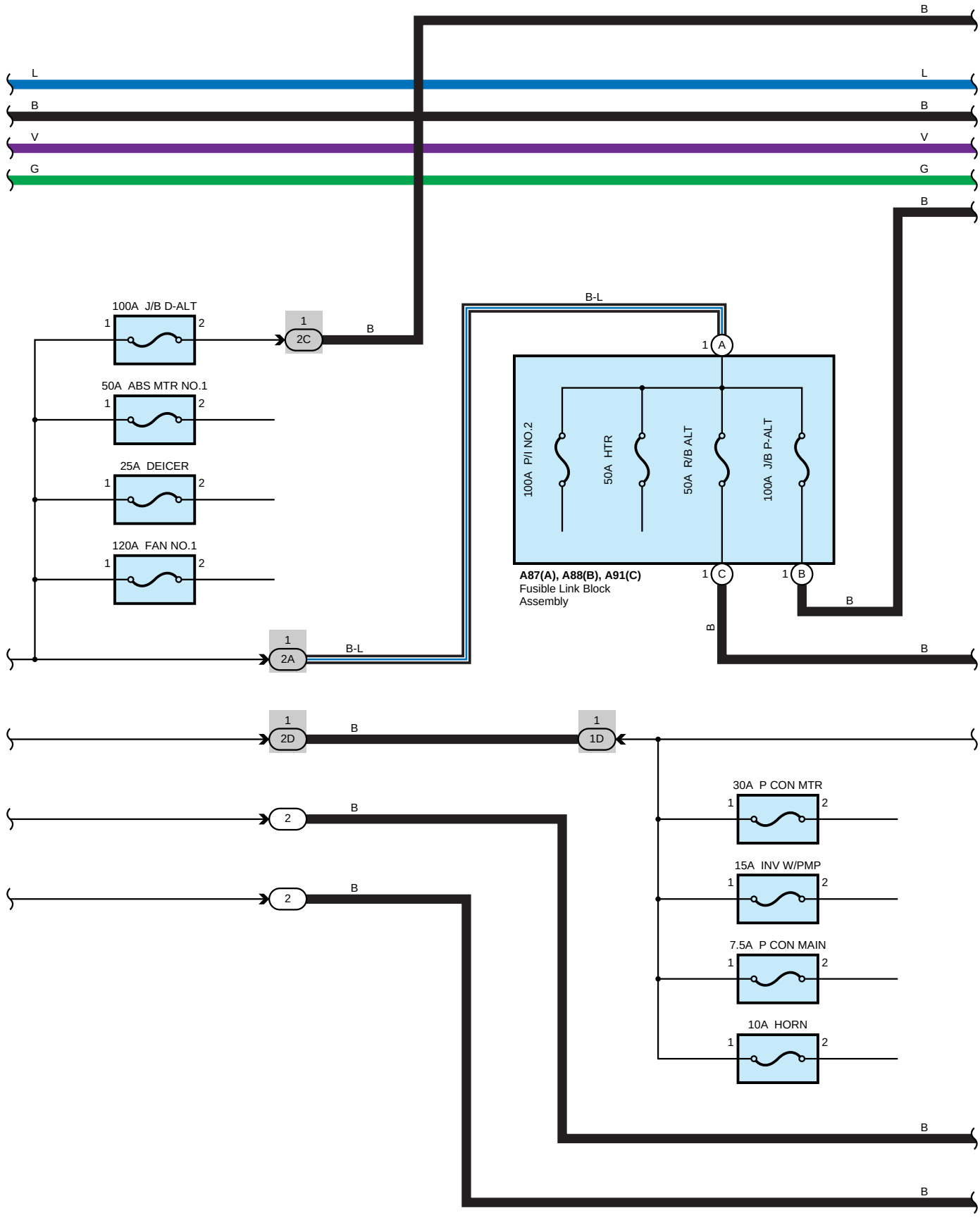
B
L
B
V
G
100A J/B D-ALT
50A ABS MTR NO.1
25A DEICER
120A FAN NO.1
1
2
2C
B
B-L
1
A
100A P/I NO.2
50A HTR
50A R/B ALT
100A J/B P-ALT
A87(A), A88(B), A91(C)
Fusible Link Block
Assembly
C
B
2A
2D
1D
2
30A P CON MTR
15A INV W/PMP
7.5A P CON MAIN
10A HORN

Power Source (12V) (LHD)

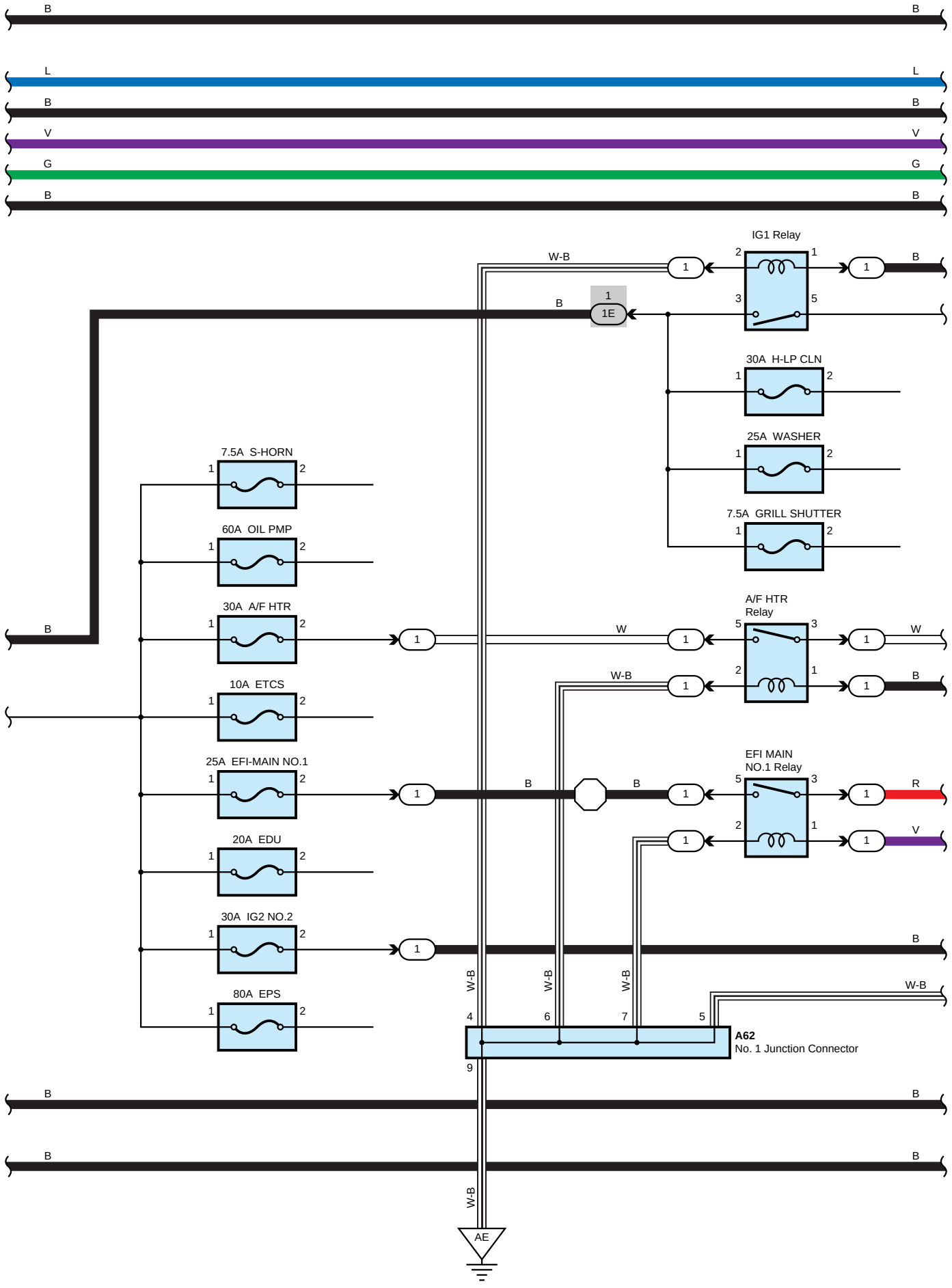

Power Source (12V) (LHD)

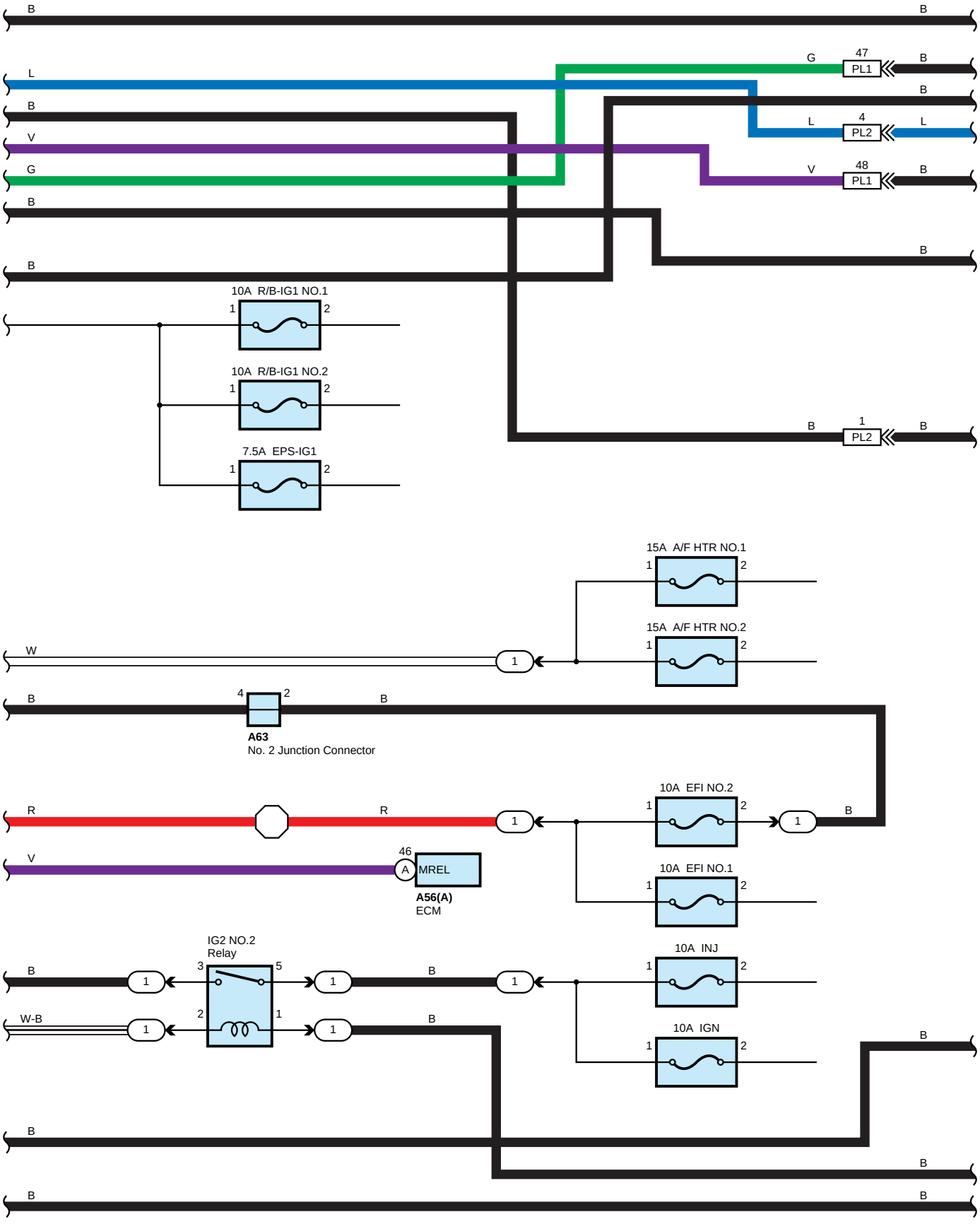

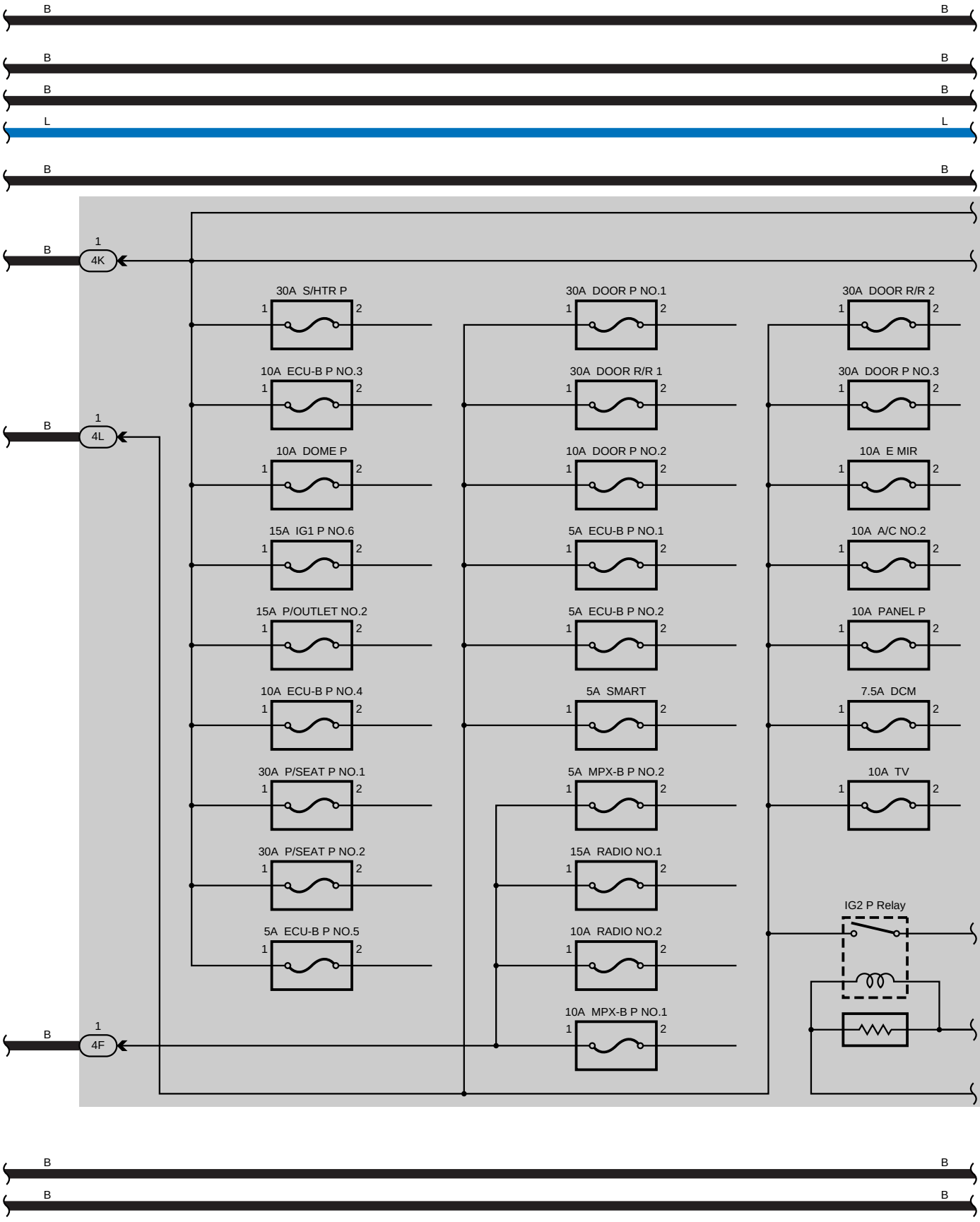
B
B
B
B
B
B
B
L
L
B
B
1
4K
B
1
4L
B
1
4F
30A S/HTR P
10A ECU-B P NO.3
10A DOME P
15A IG1 P NO.6
15A P/OUTLET NO.2
10A ECU-B P NO.4
30A P/SEAT P NO.1
30A P/SEAT P NO.2
5A ECU-B P NO.5
30A DOOR P NO.1
30A DOOR R/R 1
10A DOOR P NO.2
5A ECU-B P NO.1
5A ECU-B P NO.2
5A SMART
5A MPX-B P NO.2
15A RADIO NO.1
10A RADIO NO.2
10A MPX-B P NO.1
30A DOOR R/R 2
30A DOOR P NO.3
10A E MIR
10A A/C NO.2
10A PANEL P
7.5A DCM
10A TV
IG2 P Relay
1
2
B
B
B
B

Power Source (12V) (LHD)

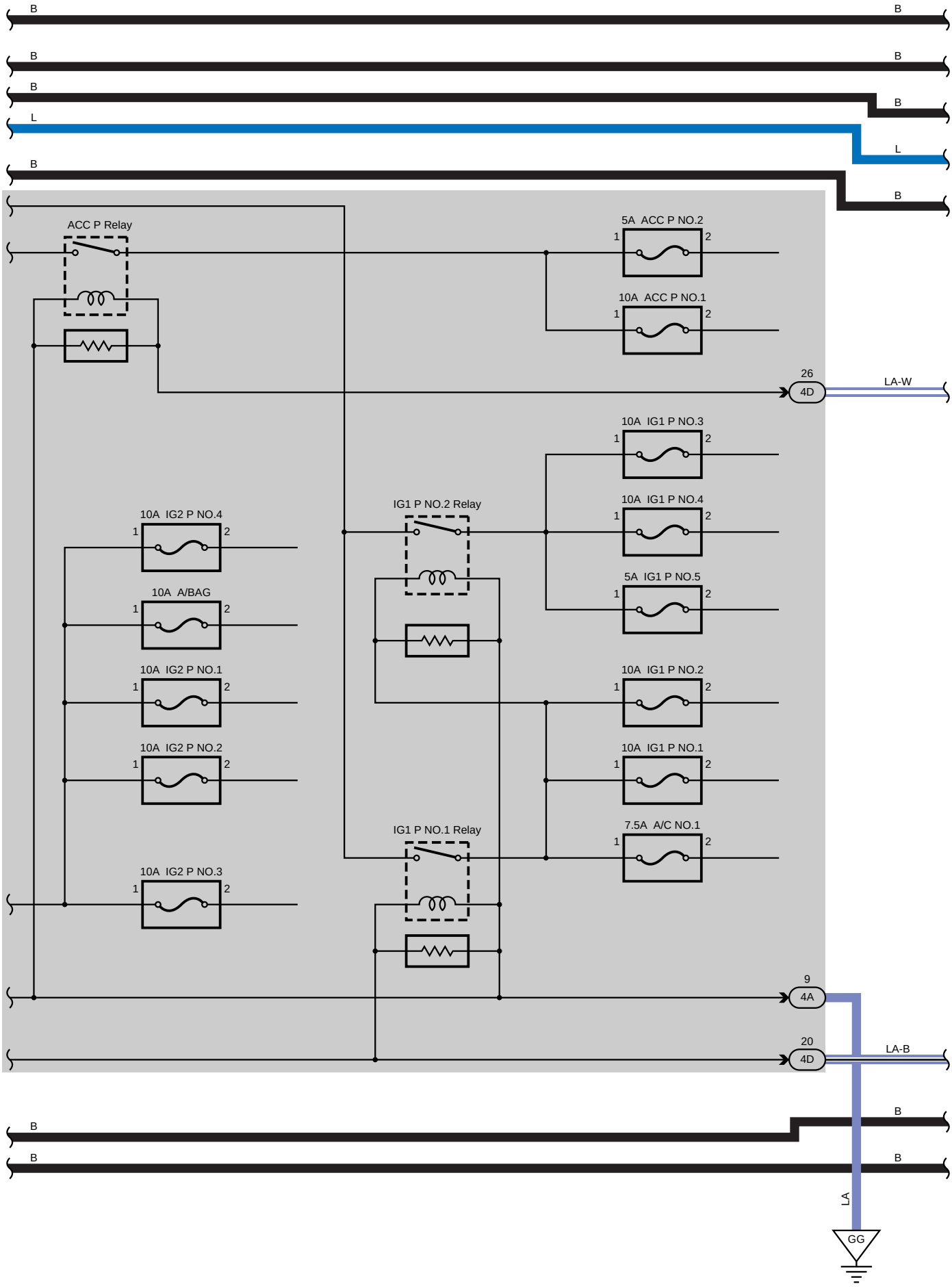

Power Source (12V) (LHD)

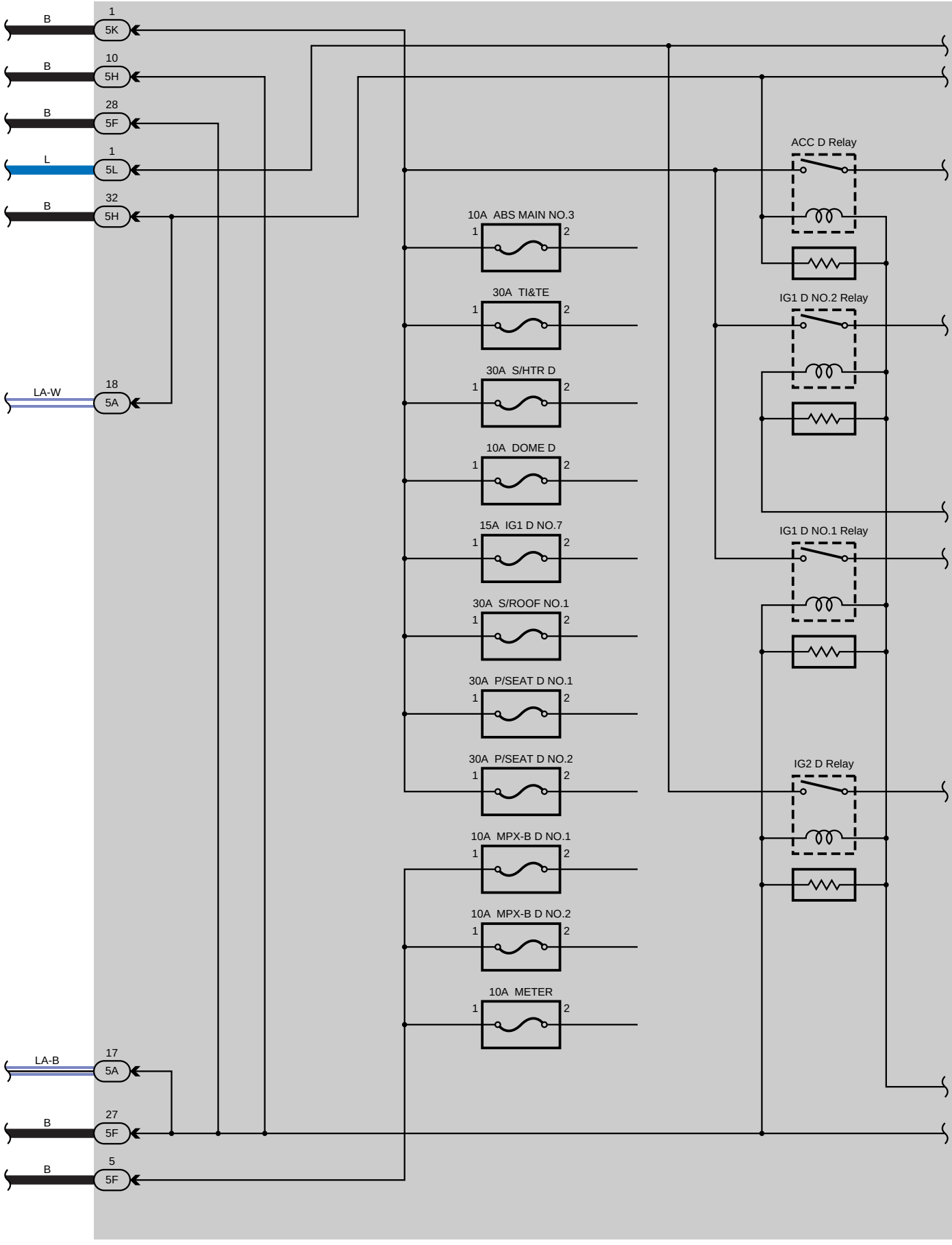

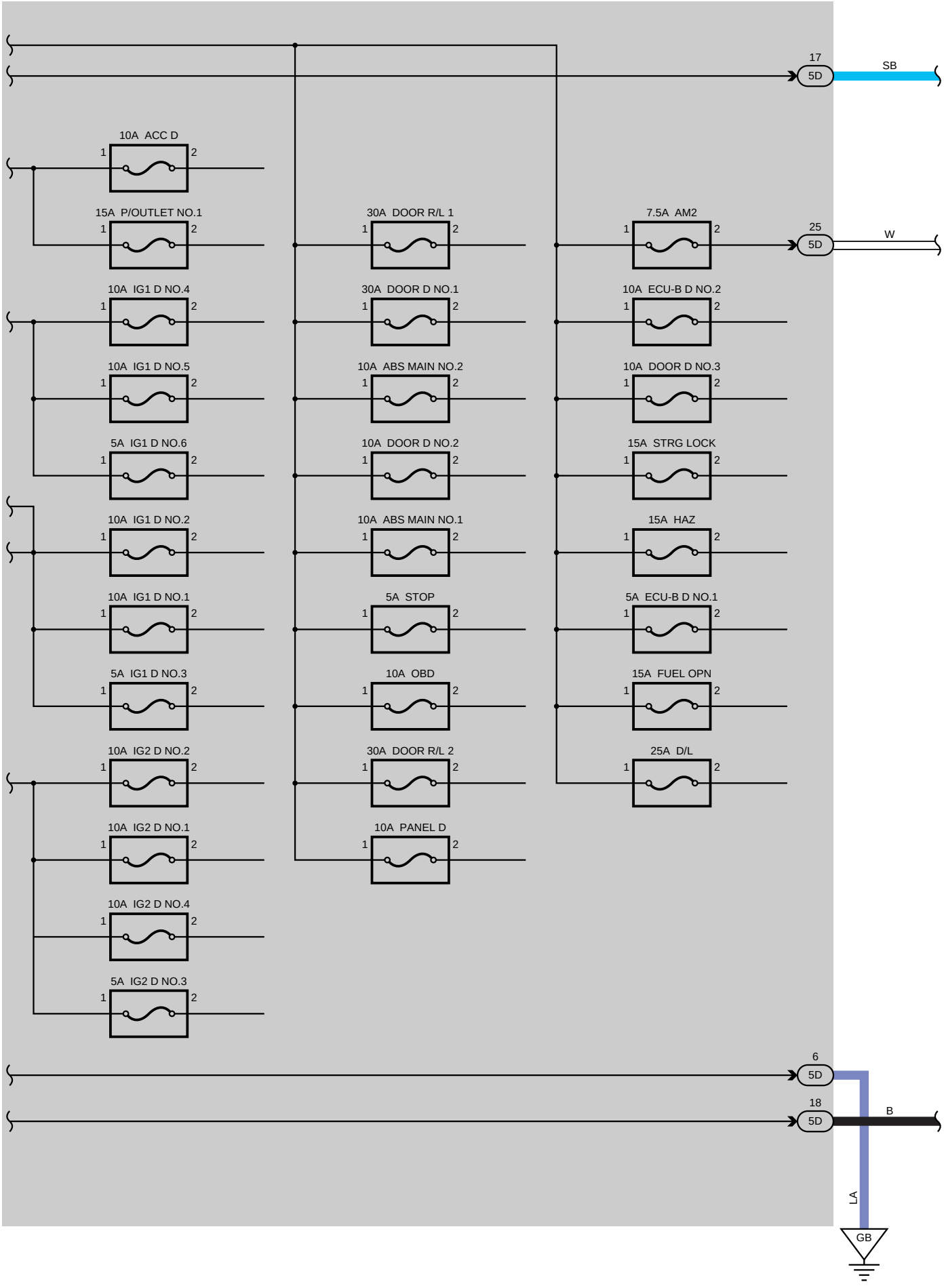
17
5D
SB
10A ACC D
15A P/OUTLET NO.1
30A DOOR R/L 1
7.5A AM2
25
5D
W
10A IG1 D NO.4
30A DOOR D NO.1
10A ECU-B D NO.2
10A IG1 D NO.5
10A ABS MAIN NO.2
10A DOOR D NO.3
5A IG1 D NO.6
10A DOOR D NO.2
15A STRG LOCK
10A IG1 D NO.2
10A ABS MAIN NO.1
15A HAZ
10A IG1 D NO.1
5A STOP
5A ECU-B D NO.1
5A IG1 D NO.3
10A OBD
15A FUEL OPN
10A IG2 D NO.2
30A DOOR R/L 2
25A D/L
10A IG2 D NO.1
10A PANEL D
10A IG2 D NO.4
5A IG2 D NO.3
6
5D
18
5D
B
LA
GB

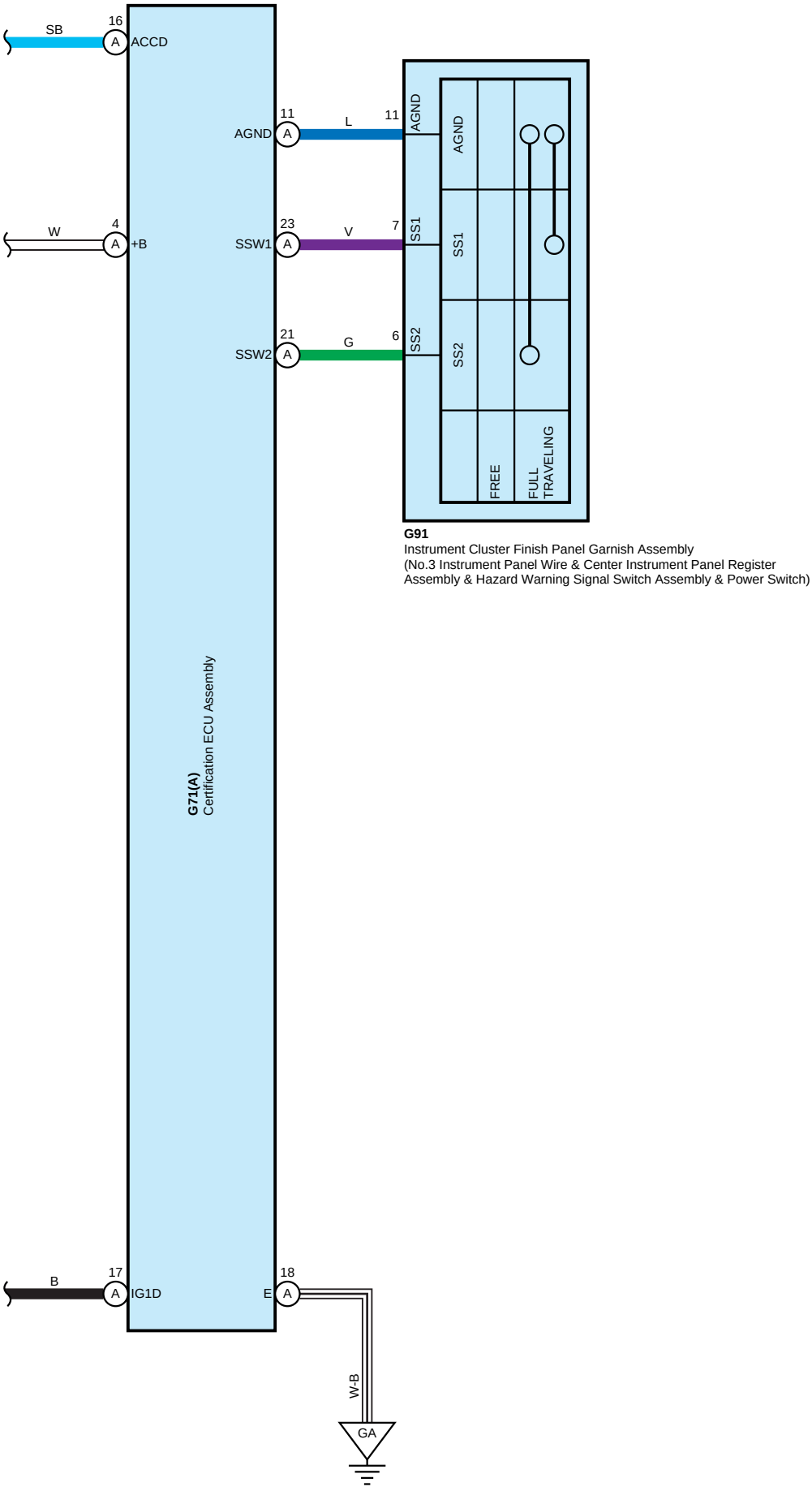
SB
16
A
ACCD
W
4
A
+B
B
17
A
IG1D
AGND
11
A
L
11
AGND
SSW1
23
A
V
7
SS1
SSW2
21
A
G
6
SS2
E
18
A
W-B
GA
G71(A)
Certification ECU Assembly
AGND
SS1
SS2
FREE
FULL
TRAVELING
G91
Instrument Cluster Finish Panel Garnish Assembly
(No.3 Instrument Panel Wire & Center Instrument Panel Register
Assembly & Hazard Warning Signal Switch Assembly & Power Switch)

A56
Black

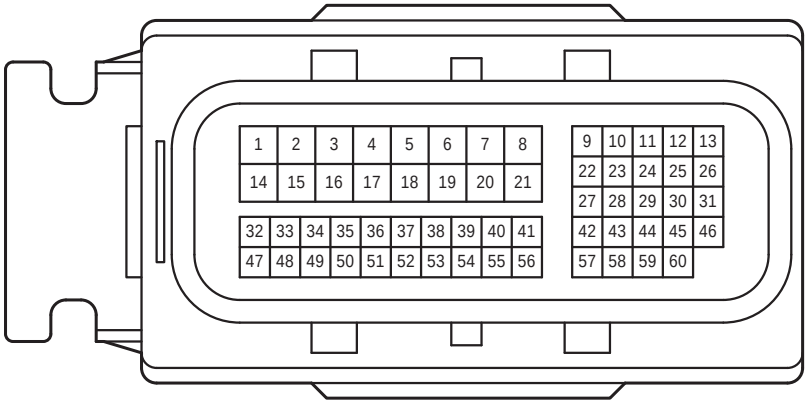

90980-12931

A62
Black

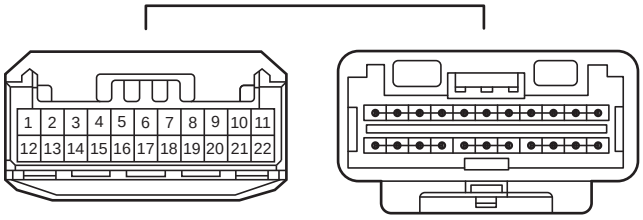

90980-12B54

A63
Black

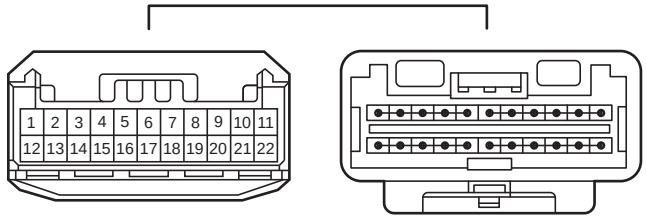

90980-12B54

A77
Gray

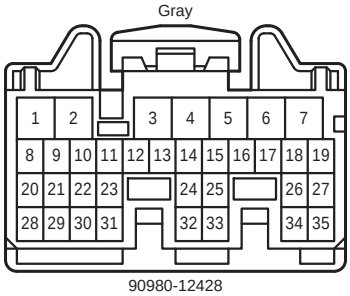

90980-12428

A87

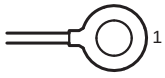

82675-30080

A88

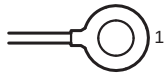

82675-45020

A91

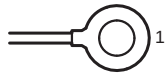

99141-13006

G66
Black

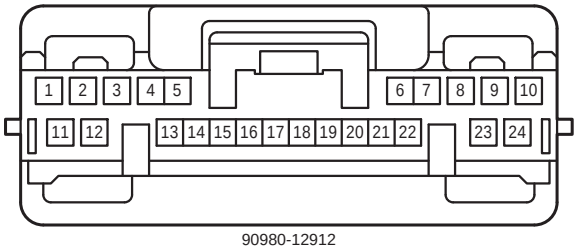

90980-12912

G71
White

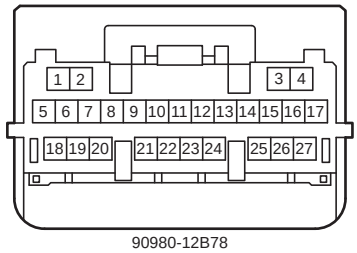

90980-12B78

G81
White

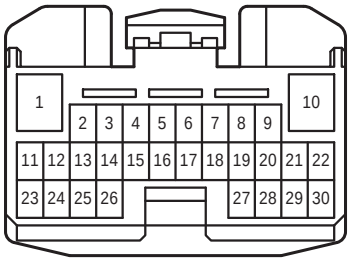

90980-12562

G91
White

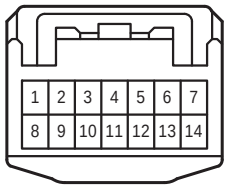

90980-12370

G92
Gray

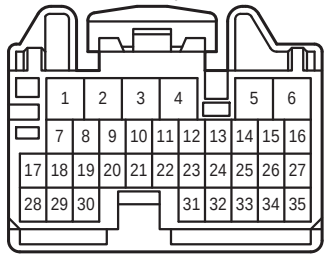

90980-12429

G93
Gray

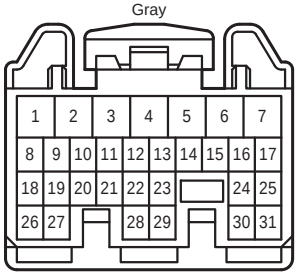

90980-12431

G129
White

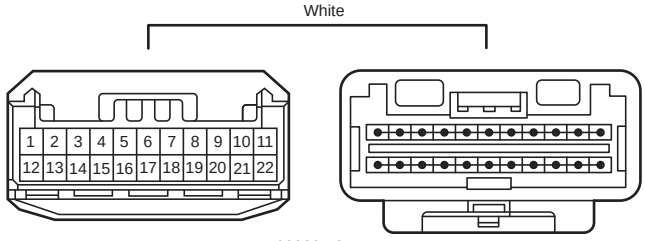

90980-12B54

L118
White

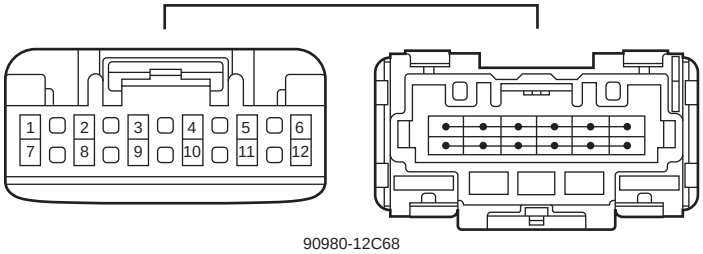

90980-12C68

L127
Blue

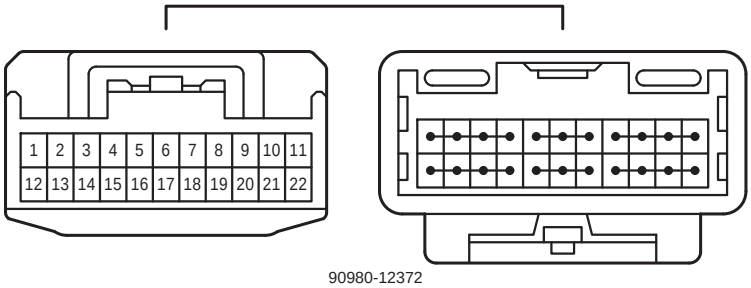

90980-12372

M1

82675-50180

P6
White

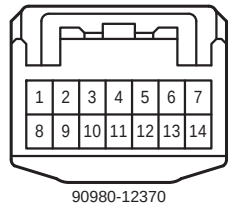

90980-12370

P13

82675-28470

P14

90980-09204

P15

90980-09205

U1

90980-09A81

U2

82675-28470

1D

82675-45020

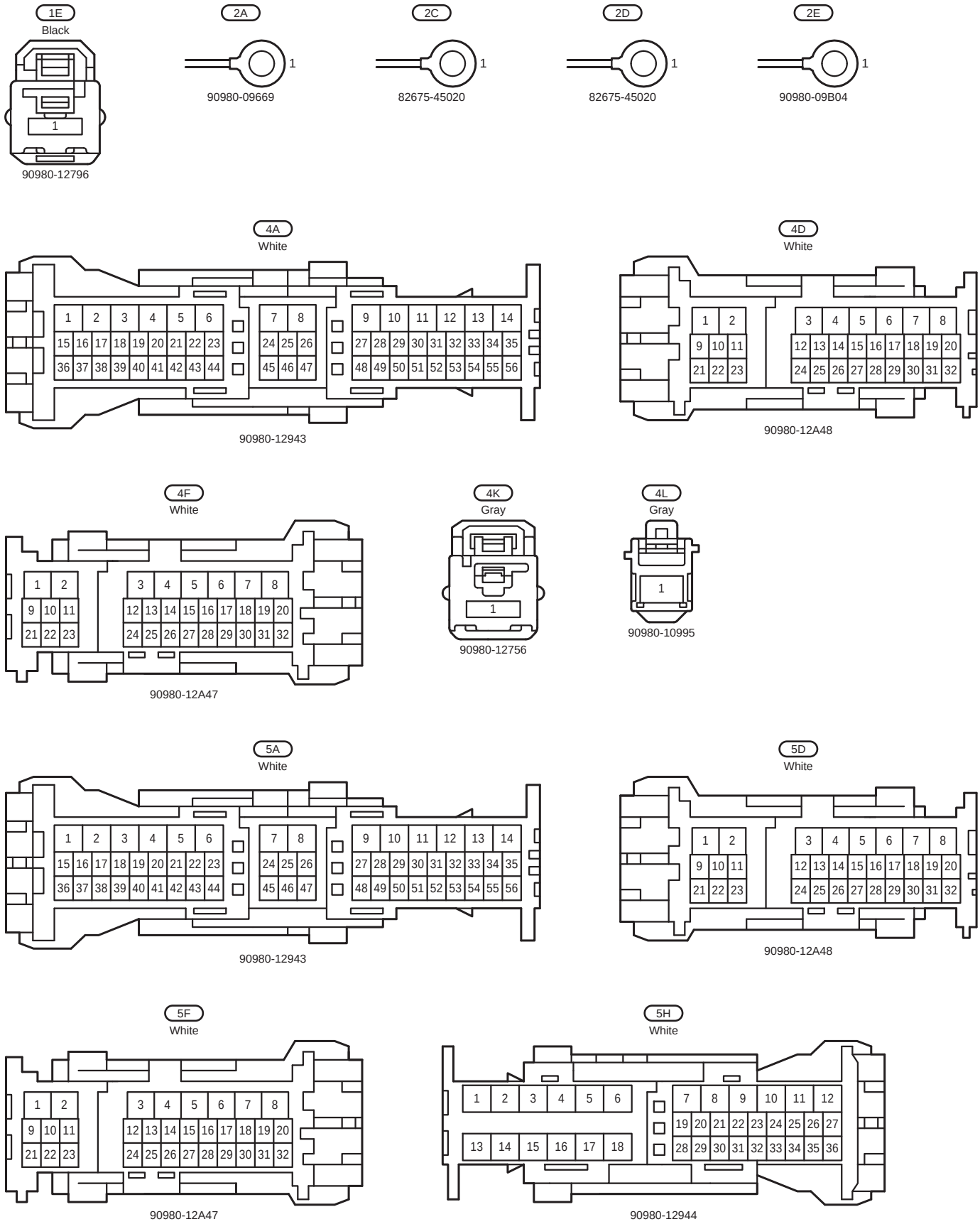
1E
Black
1
90980-12796
2A
1
90980-09669
2C
1
82675-45020
2D
1
82675-45020
2E
1
90980-09B04
4A
White
90980-12943
4D
White
90980-12A48
4F
White
90980-12A47
4K
Gray
1
90980-12756
4L
Gray
1
90980-10995
5A
White
90980-12943
5D
White
90980-12A48
5F
White
90980-12A47
5H
White
90980-12944

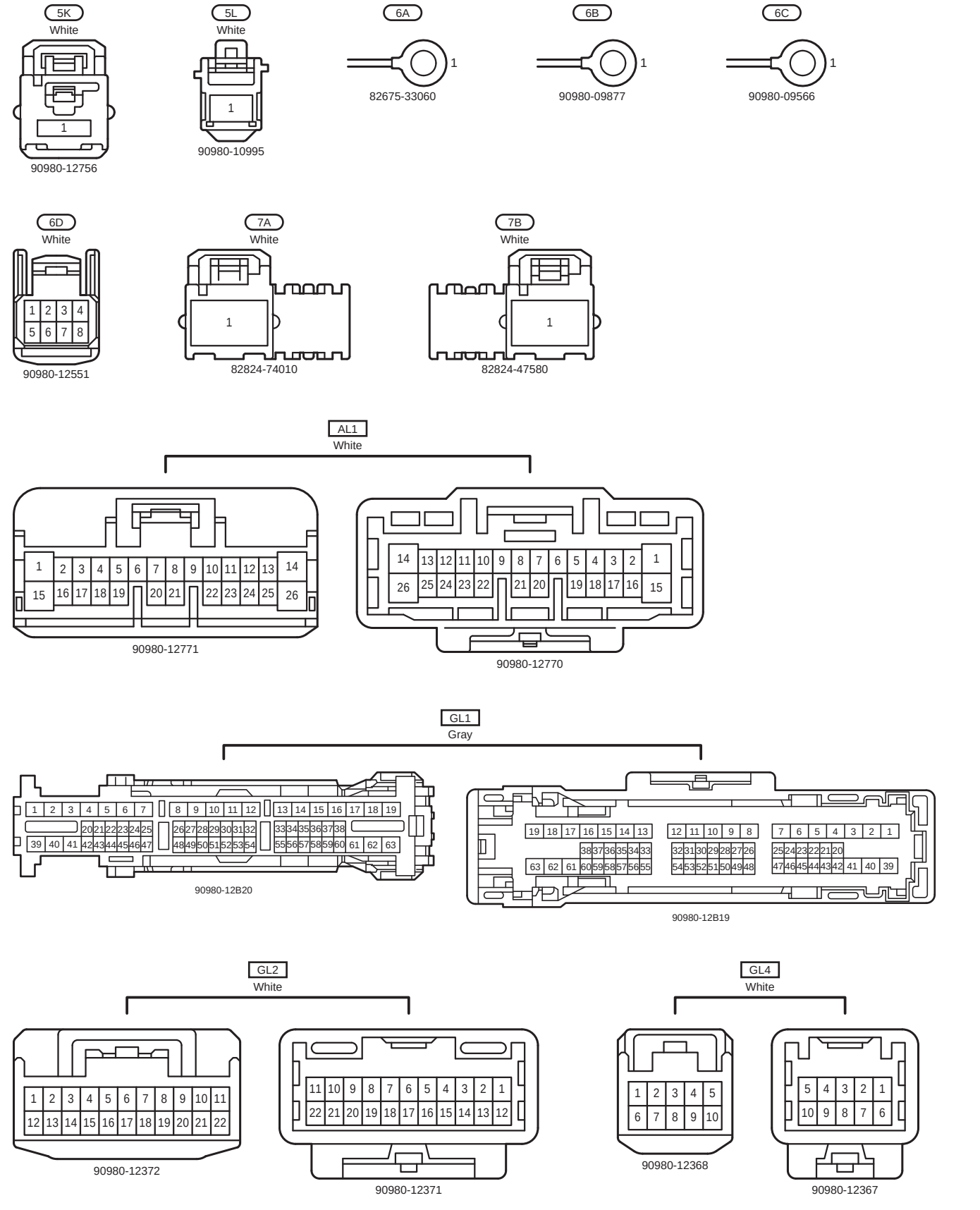
5K
White
1
90980-12756
5L
White
1
90980-10995
6A
1
82675-33060
6B
1
90980-09877
6C
1
90980-09566
6D
White
1 2 3 4
5 6 7 8
90980-12551
7A
White
1
82824-74010
7B
White
1
82824-47580
AL1
White
1 2 3 4 5 6 7 8 9 10 11 12 13 14
15 16 17 18 19 20 21 22 23 24 25 26
90980-12771
14 13 12 11 10 9 8 7 6 5 4 3 2 1
26 25 24 23 22 21 20 19 18 17 16 15
90980-12770
GL1
Gray
1 2 3 4 5 6 7 8 9 10 11 12 13 14 15 16 17 18 19
20 21 22 23 24 25 26 27 28 29 30 31 32 33 34 35 36 37 38
39 40 41 42 43 44 45 46 47 48 49 50 51 52 53 54 55 56 57 58 59 60 61 62 63
90980-12B20
19 18 17 16 15 14 13 12 11 10 9 8 7 6 5 4 3 2 1
38 37 36 35 34 33 32 31 30 29 28 27 26 25 24 23 22 21 20
63 62 61 60 59 58 57 56 55 54 53 52 51 50 49 48 47 46 45 44 43 42 41 40 39
90980-12B19
GL2
White
1 2 3 4 5 6 7 8 9 10 11
12 13 14 15 16 17 18 19 20 21 22
90980-12372
11 10 9 8 7 6 5 4 3 2 1
22 21 20 19 18 17 16 15 14 13 12
90980-12371
GL4
White
1 2 3 4 5
6 7 8 9 10
90980-12368
5 4 3 2 1
10 9 8 7 6
90980-12367

PL1
Gray

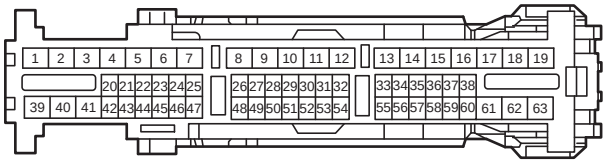

90980-12B20

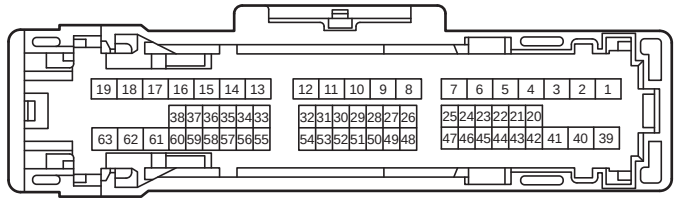

90980-12B19

PL2
White

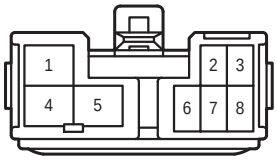

90980-10877

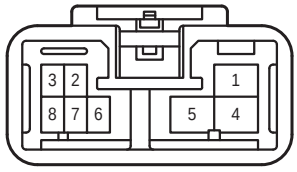

90980-10876

PL3
White

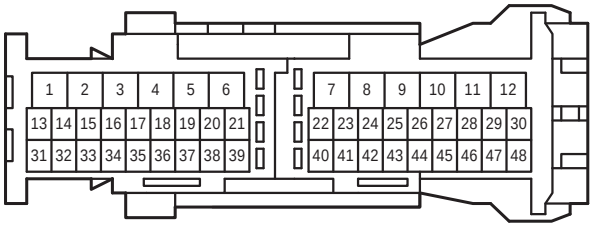

90980-12779

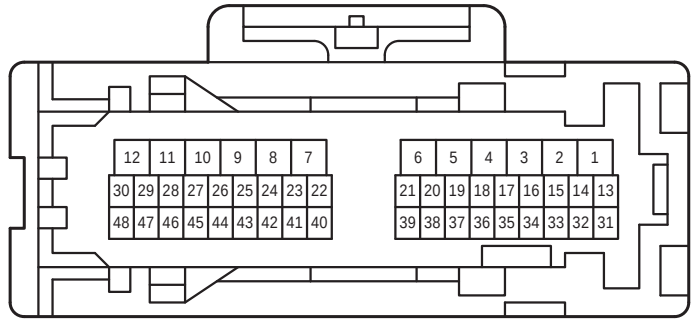

90980-12799