# AUTOMATIC LIGHT CONTROL (LHD)

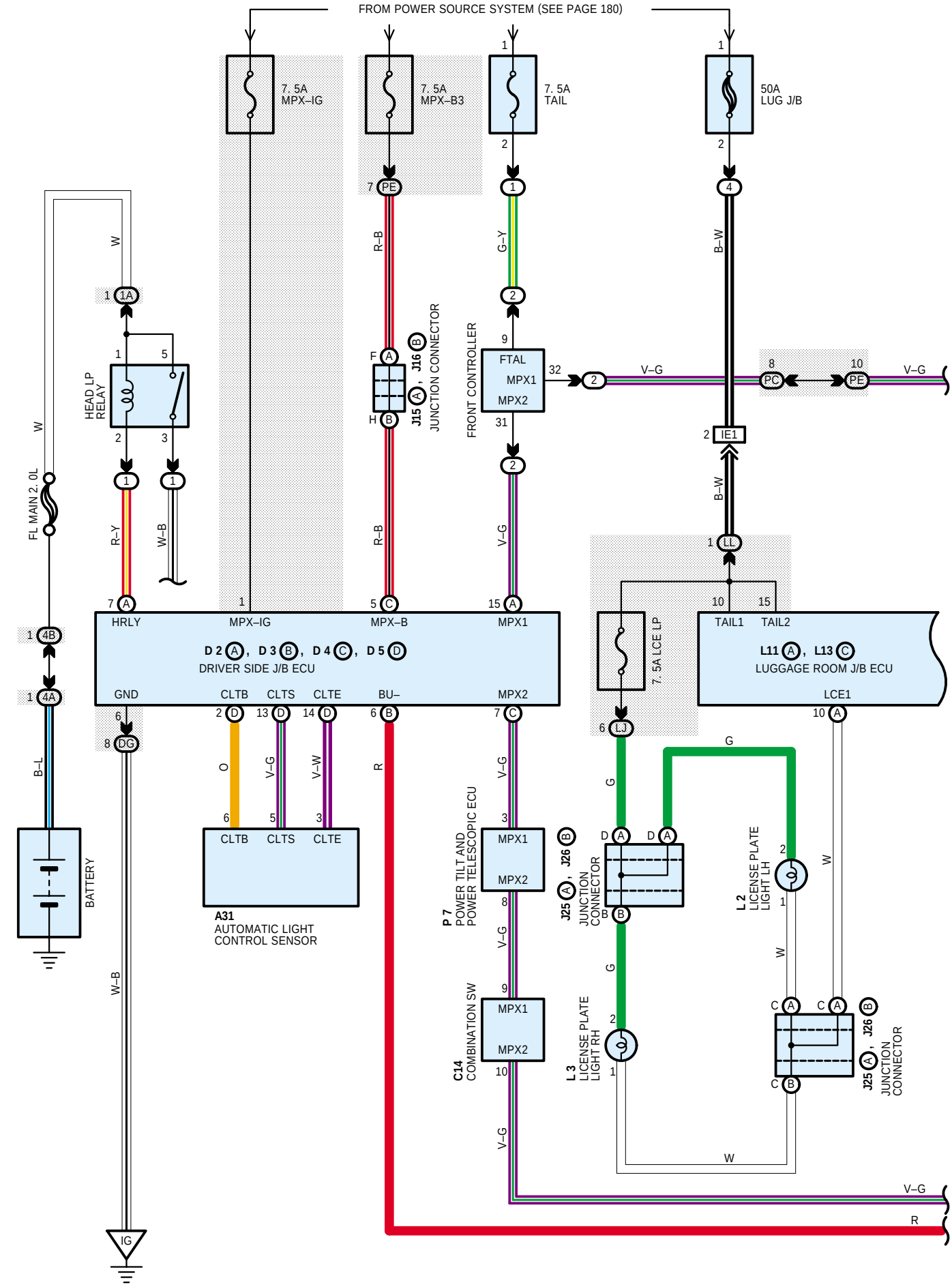
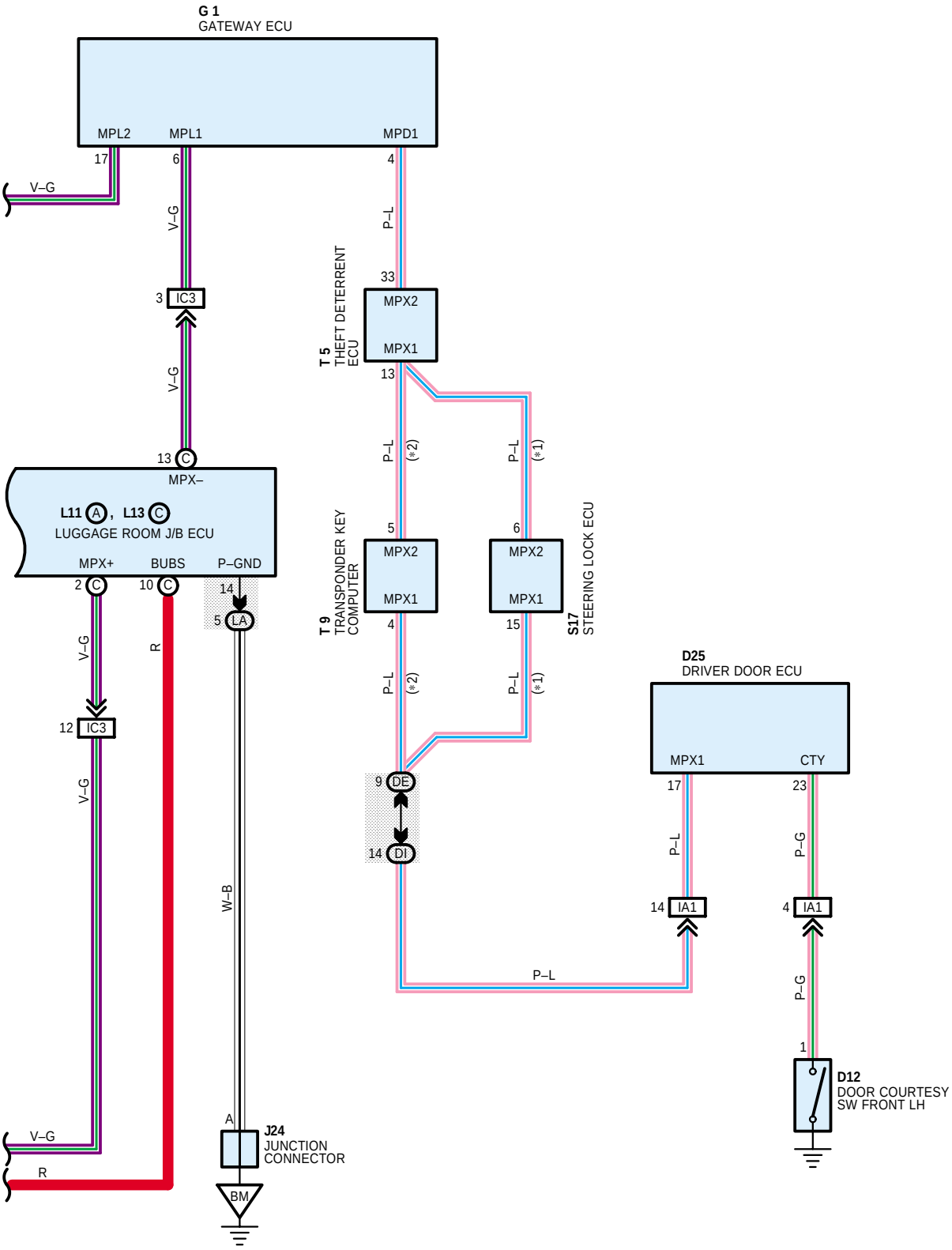
＊1 : W/ SMART KEY SYSTEM
＊2 : W/O SMART KEY SYSTEM