POWER TILT AND POWER TELESCOPIC (LHD)

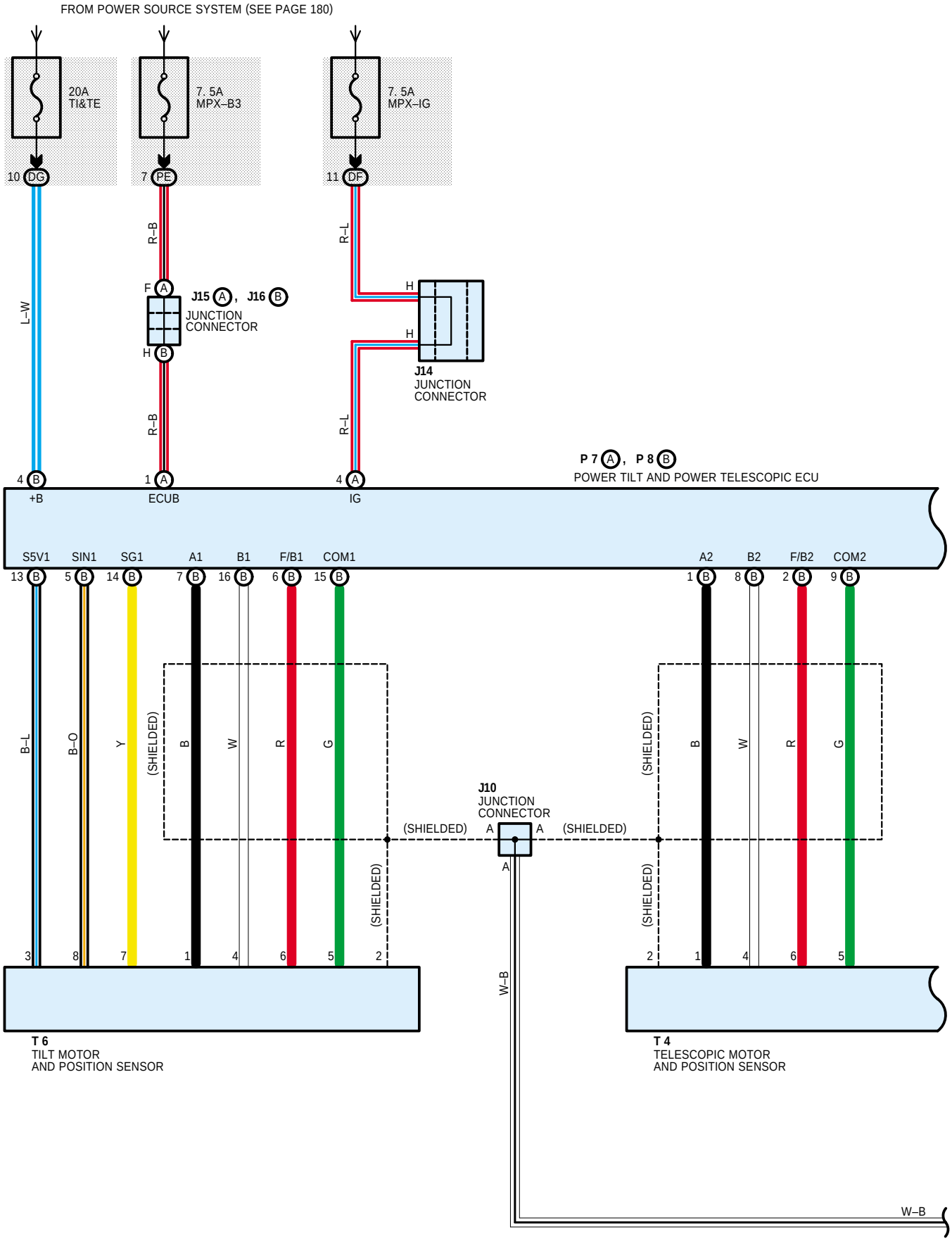

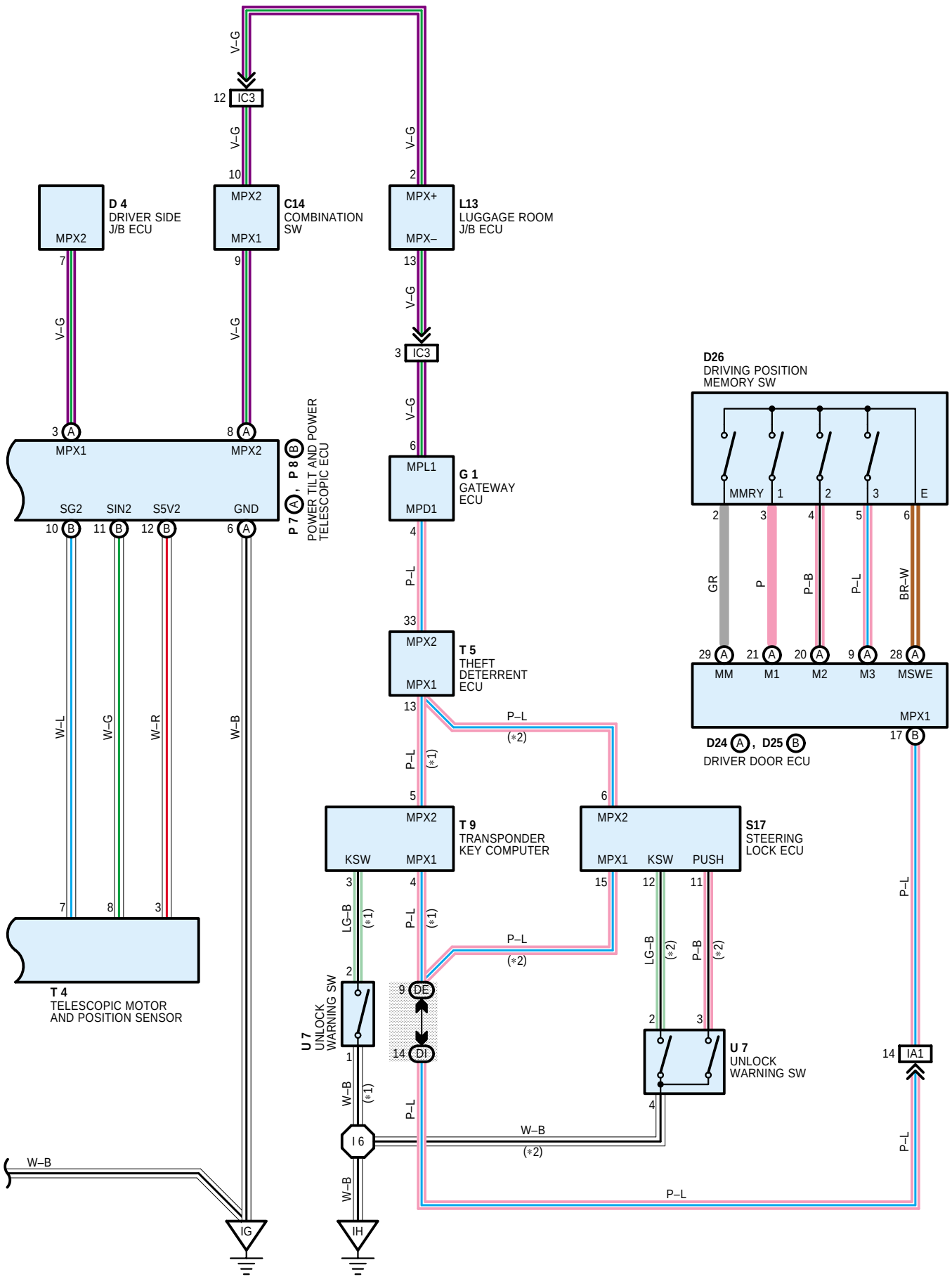
D 4
DRIVER SIDE
J/B ECU
MPX2
C14
COMBINATION
SW
MPX2
MPX1
L13
LUGGAGE ROOM
J/B ECU
MPX+
MPX–
IC3
V–G
P 7 A , P 8 B
POWER TILT AND POWER
TELESCOPIC ECU
MPX1
MPX2
SG2
SIN2
S5V2
GND
G 1
GATEWAY
ECU
MPL1
MPD1
T 5
THEFT
DETERRENT
ECU
MPX2
MPX1
D26
DRIVING POSITION
MEMORY SW
MMRY
E
GR
P
P–B
P–L
BR–W
MM
M1
M2
M3
MSWE
MPX1
D24 A , D25 B
DRIVER DOOR ECU
W–L
W–G
W–R
W–B
T 4
TELESCOPIC MOTOR
AND POSITION SENSOR
T 9
TRANSPONDER
KEY COMPUTER
MPX2
KSW
MPX1
S17
STEERING
LOCK ECU
MPX2
MPX1
KSW
PUSH
LG–B
(∗1)
(∗2)
U 7
UNLOCK
WARNING SW
DE
DI
I 6
IA1
IG
IH