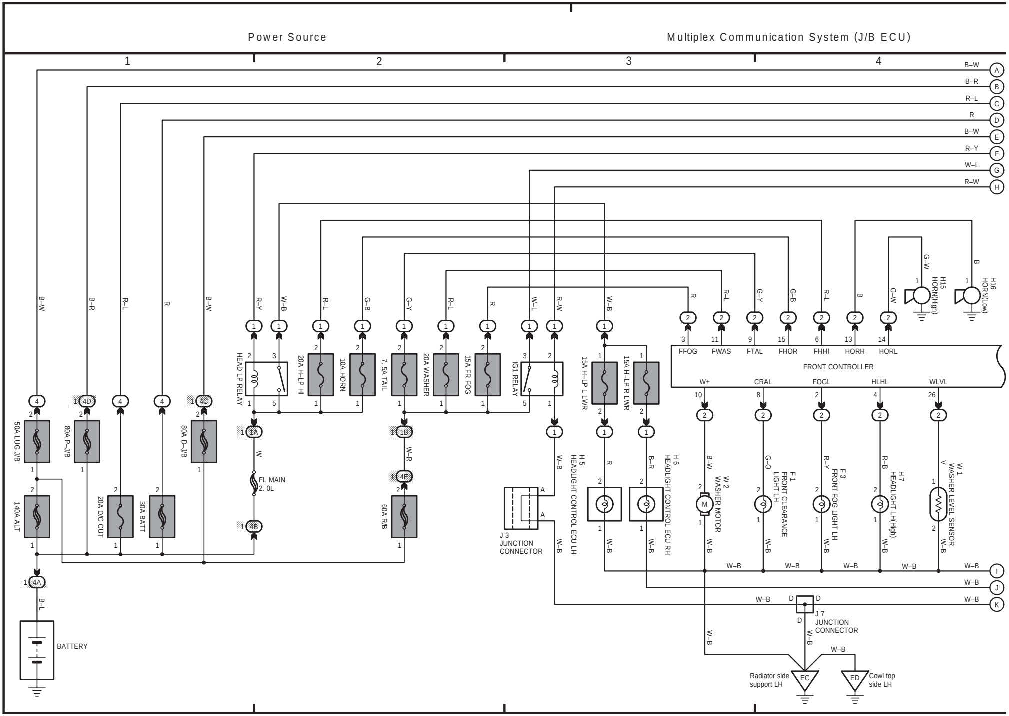
Power Source
Multiplex Communication System (J/B ECU)
1
2
3
4
B–W
A
B–R
B
R–L
C
R
D
B–W
E
R–Y
F
W–L
G
R–W
H
50A LUG J/B
80A P–J/B
80A D–J/B
140A ALT
20A D/C CUT
30A BATT
4
4D
4C
4A
B–L
BATTERY
1A
W
FL MAIN
2. 0L
4B
HEAD LP RELAY
20A H–LP HI
10A HORN
7. 5A TAIL
20A WASHER
15A FR FOG
IG1 RELAY
1B
W–R
4E
60A R/B
15A H–LP L LWR
15A H–LP R LWR
R–Y
W–B
G–B
G–Y
W–L
R–W
G–W
B–W
G–O
R–B
V
H15
HORN(High)
H16
HORN(Low)
FFOG
FWAS
FTAL
FHOR
FHHI
HORH
HORL
FRONT CONTROLLER
W+
CRAL
FOGL
HLHL
WLVL
H5
HEADLIGHT CONTROL ECU LH
H6
HEADLIGHT CONTROL ECU RH
W2
WASHER MOTOR
M
F1
FRONT CLEARANCE LIGHT LH
F3
FRONT FOG LIGHT LH
H7
HEADLIGHT LH(High)
W1
WASHER LEVEL SENSOR
J3
JUNCTION CONNECTOR
J7
JUNCTION CONNECTOR
I
J
K
EC
Radiator side support LH
ED
Cowl top side LH

(Cont. next page)

Multiplex Communication System (J/B ECU)

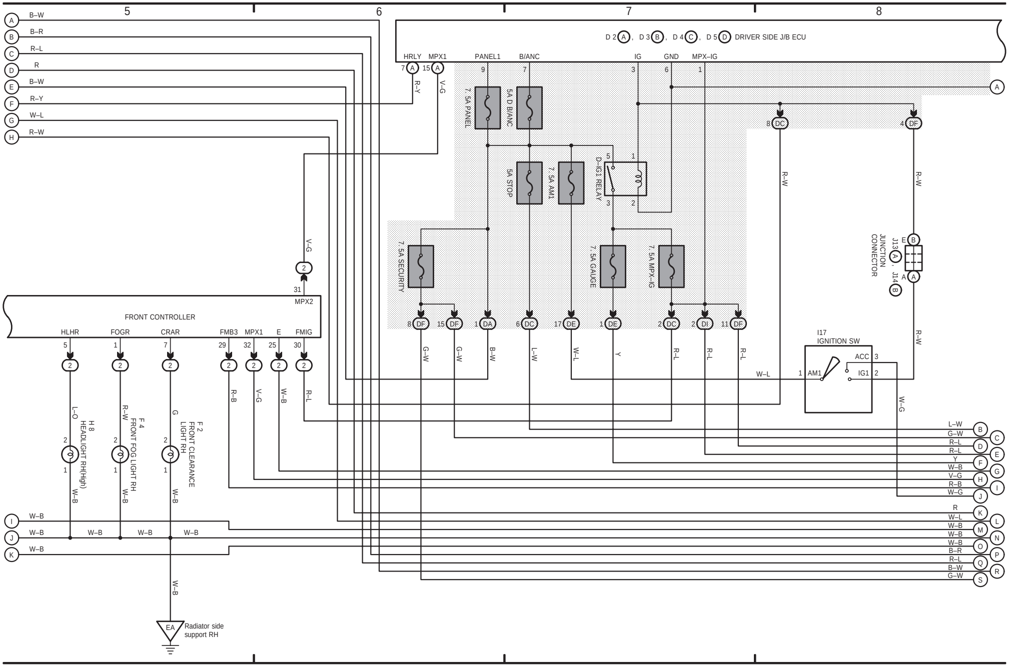
5
6
7
8
A B–W
B B–R
C R–L
D R
E B–W
F R–Y
G W–L
H R–W
D 2 (A), D 3 (B), D 4 (C), D 5 (D) DRIVER SIDE J/B ECU
HRLY
MPX1
PANEL1
B/ANC
IG
GND
MPX–IG
7 (A)
15 (A)
9
7
3
6
1
R–Y
V–G
7.5A PANEL
5A D B/ANC
5A STOP
7.5A AM1
D–IG1 RELAY
5
1
3
2
7.5A SECURITY
7.5A GAUGE
7.5A MPX–IG
8 DC
4 DF
R–W
E (B)
J13 (A), J14 (B)
JUNCTION CONNECTOR
A (A)
8 DF
15 DF
1 DA
6 DC
17 DE
1 DE
2 DC
2 DI
11 DF
G–W
G–W
B–W
L–W
W–L
Y
R–L
R–L
R–L
I17
IGNITION SW
ACC 3
1 AM1
IG1 2
W–L
W–G
V–G
2
31
MPX2
FRONT CONTROLLER
HLHR
FOGR
CRAR
FMB3
MPX1
E
FMIG
5
1
7
29
32
25
30
2
L–O
R–W
G
R–B
V–G
W–B
R–L
H 8
HEADLIGHT RH(High)
F 4
FRONT FOG LIGHT RH
F 2
FRONT CLEARANCE LIGHT RH
2
1
W–B
I W–B
J W–B
K W–B
W–B
EA
Radiator side support RH
B L–W
C G–W
D R–L
E R–L
F Y
G W–B
H V–G
I R–B
J W–G
K R
L W–L
M W–B
N W–B
O W–B
P B–R
Q R–L
R B–W
S G–W
A

Multiplex Communication System (J/B ECU)

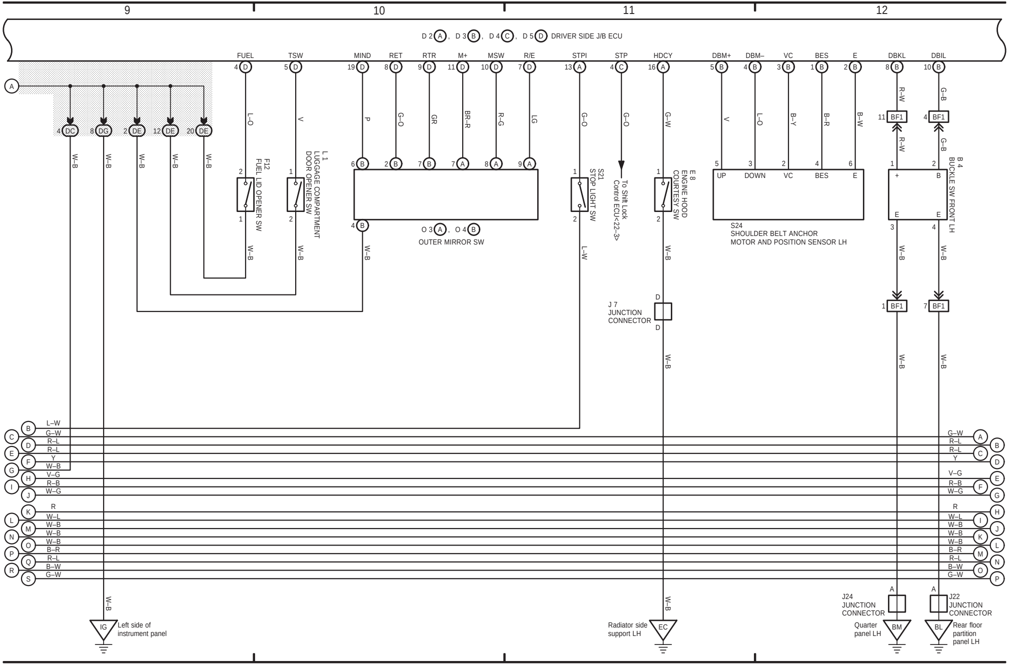
9
10
11
12
D 2 A, D 3 B, D 4 C, D 5 D DRIVER SIDE J/B ECU
FUEL
TSW
MIND
RET
RTR
M+
MSW
R/E
STPI
STP
HDCY
DBM+
DBM–
VC
BES
E
DBKL
DBIL
A
4 DC
8 DG
2 DE
12 DE
20 DE
W–B
L–O
V
P
G–O
GR
BR–R
R–G
LG
G–W
B–Y
B–R
B–W
R–W
G–B
BF1
F12
FUEL LID OPENER SW
L 1
LUGGAGE COMPARTMENT
DOOR OPENER SW
O 3 A, O 4 B
OUTER MIRROR SW
S21
STOP LIGHT SW
To Shift Lock
Control ECU<22–3>
E 8
ENGINE HOOD
COURTESY SW
UP
DOWN
VC
BES
E
S24
SHOULDER BELT ANCHOR
MOTOR AND POSITION SENSOR LH
B 4
BUCKLE SW FRONT LH
L–W
J 7
JUNCTION
CONNECTOR
R–L
Y
V–G
R–B
W–G
R
W–L
B–R
B–W
IG
Left side of
instrument panel
EC
Radiator side
support LH
J24
JUNCTION
CONNECTOR
BM
Quarter
panel LH
J22
JUNCTION
CONNECTOR
BL
Rear floor
partition
panel LH

Multiplex Communication System (J/B ECU)

∗ 1 : w/ LEXUS Park Assist(Clearance Sonar)
∗ 2 : w/ Electronic Modulated Air Suspension

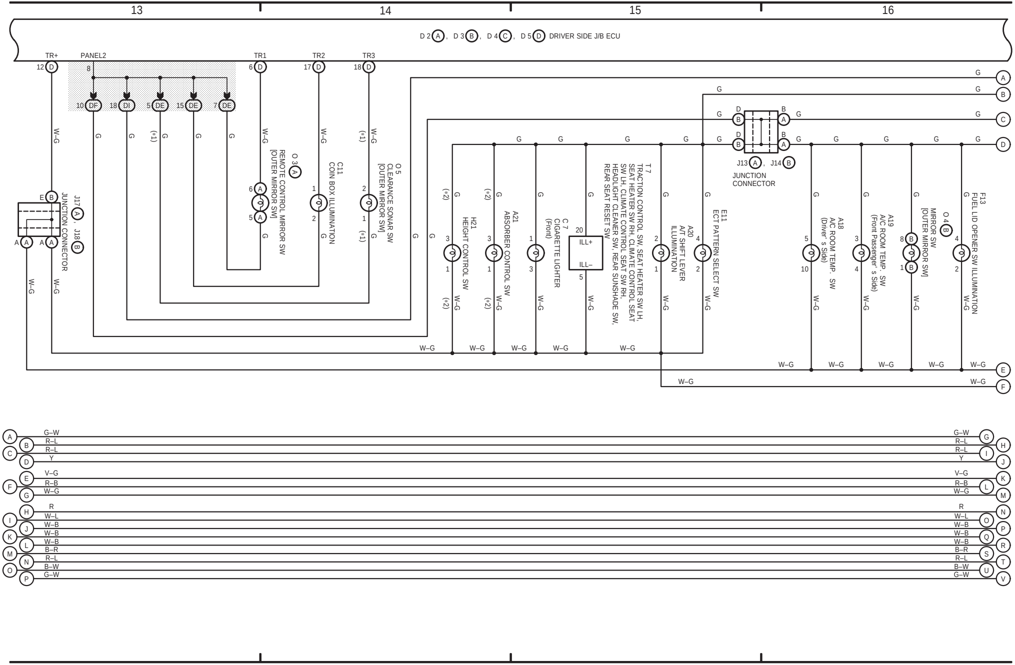
13
14
15
16
D 2 A , D 3 B , D 4 C , D 5 D DRIVER SIDE J/B ECU
TR+
PANEL2
TR1
TR2
TR3
12 D
8
6 D
17 D
18 D
10 DF
18 DI
5 DE
15 DE
7 DE
W–G
G
(∗1)
O 3 A
REMOTE CONTROL MIRROR SW [OUTER MIRROR SW]
C11 COIN BOX ILLUMINATION
O 5 CLEARANCE SONAR SW [OUTER MIRROR SW]
J17 A , J18 B JUNCTION CONNECTOR
T 7 TRACTION CONTROL SW, SEAT HEATER SW LH, SEAT HEATER SW RH, CLIMATE CONTROL SEAT SW LH, CLIMATE CONTROL SEAT SW RH, HEADLIGHT CLEANER SW, REAR SUNSHADE SW, REAR SEAT RESET SW
(∗2)
H21 HEIGHT CONTROL SW
A21 ABSORBER CONTROL SW
C 7 CIGARETTE LIGHTER (Front)
ILL+
ILL–
A20 A/T SHIFT LEVER ILLUMINATION
E11 ECT PATTERN SELECT SW
J13 A , J14 B JUNCTION CONNECTOR
A18 A/C ROOM TEMP. SW (Driver' s Side)
A19 A/C ROOM TEMP. SW (Front Passenger' s Side)
O 4 B MIRROR SW [OUTER MIRROR SW]
F13 FUEL LID OPENER SW ILLUMINATION
A
B
C
D
E
F
G–W
R–L
R–L
Y
V–G
R–B
W–G
R
W–L
W–B
W–B
W–B
B–R
R–L
B–W
G–W
A B C D E F G H I J K L M N O P
G H I J K L M N O P Q R S T U V

(Cont. next page)

Multiplex Communication System (J/B ECU)

∗ 3 : w/ Rear Power Seat
∗ 4 : w/ LEXUS Navigation System
∗ 5 : w/o LEXUS Navigation System
∗ 6 : w/o Rear Power Seat

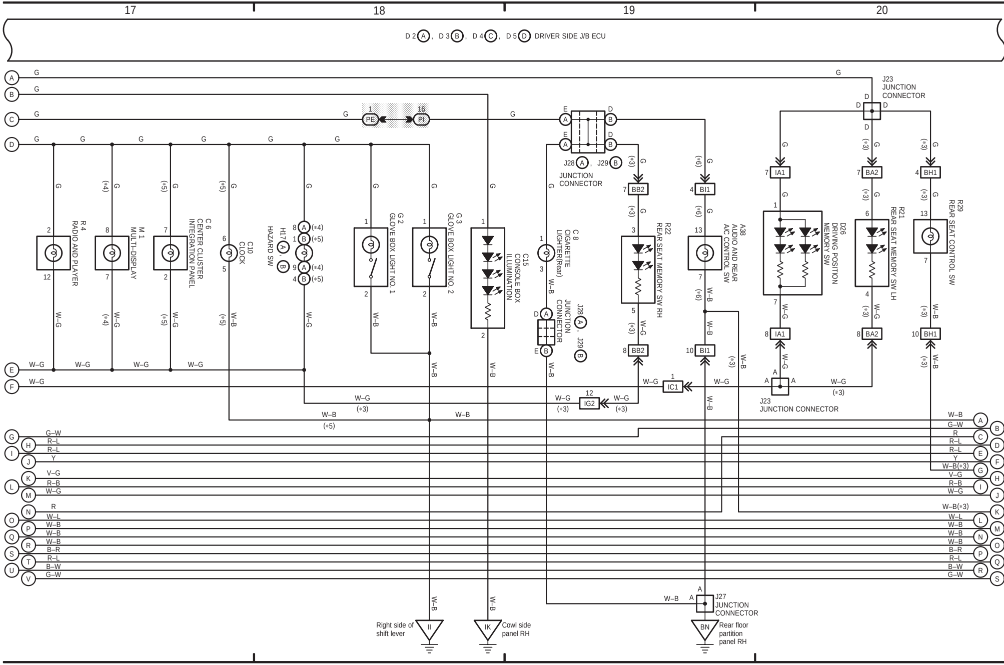
17
18
19
20
D 2 Ⓐ, D 3 Ⓑ, D 4 Ⓒ, D 5 Ⓓ DRIVER SIDE J/B ECU
R 4 RADIO AND PLAYER
M 1 MULTI–DISPLAY
C 6 CENTER CLUSTER INTEGRATION PANEL
C10 CLOCK
H17 Ⓐ, Ⓑ HAZARD SW
G 2 GLOVE BOX LIGHT NO. 1
G 3 GLOVE BOX LIGHT NO. 2
C15 CONSOLE BOX ILLUMINATION
C 8 CIGARETTE LIGHTER(Rear)
J28 Ⓐ, J29 Ⓑ JUNCTION CONNECTOR
R22 REAR SEAT MEMORY SW RH
A38 AUDIO AND REAR A/C CONTROL SW
D26 DRIVING POSITION MEMORY SW
R21 REAR SEAT MEMORY SW LH
R29 REAR SEAT CONTROL SW
J23 JUNCTION CONNECTOR
J27 JUNCTION CONNECTOR
PE
PI
IA1
BA2
BH1
BB2
BI1
IC1
IG2
II
IK
BN
Right side of shift lever
Cowl side panel RH
Rear floor partition panel RH
G
W–G
W–B
G–W
R–L
Y
V–G
R–B
R
W–L
B–R
B–W
W–B(∗3)
(∗3)
(∗4)
(∗5)
(∗6)
A
B
C
D
E
F
G
H
I
J
K
L
M
N
O
P
Q
R
S
T
U
V

* 3 : w/ Rear Power Seat
* 4 : w/ LEXUS Navigation System
* 5 : w/o LEXUS Navigation System
* 7 : w/ Rear Cooler

Multiplex Communication System (J/B ECU)

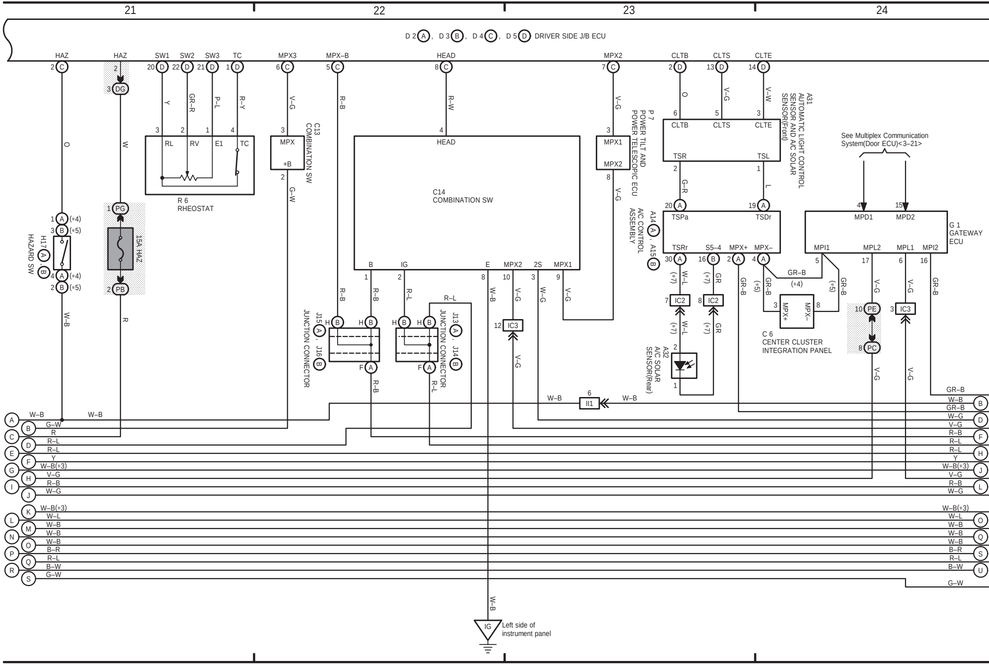
21
22
23
24
D 2 (A), D 3 (B), D 4 (C), D 5 (D) DRIVER SIDE J/B ECU
HAZ
HAZ
SW1
SW2
SW3
TC
MPX3
MPX–B
HEAD
MPX2
CLTB
CLTS
CLTE
DG
PG
PB
15A HAZ
H17 (A), (B) HAZARD SW
(*4)
(*5)
R 6 RHEOSTAT
RL
RV
E1
TC
C13 COMBINATION SW
MPX
+B
C14 COMBINATION SW
HEAD
B
IG
E
MPX2
2S
MPX1
P 7 POWER TILT AND POWER TELESCOPIC ECU
MPX1
MPX2
A31 AUTOMATIC LIGHT CONTROL SENSOR AND A/C SOLAR SENSOR(Front)
TSR
TSL
A14 (A), A15 (B) A/C CONTROL ASSEMBLY
TSPa
TSDr
TSRr
S5–4
MPX+
MPX–
See Multiplex Communication System(Door ECU)<3–21>
G 1 GATEWAY ECU
MPD1
MPD2
MPI1
MPL2
MPL1
MPI2
J15 (A), J16 (B) JUNCTION CONNECTOR
J13 (A), J14 (B) JUNCTION CONNECTOR
IC2
IC3
II1
PE
PC
A32 A/C SOLAR SENSOR(Rear)
C 6 CENTER CLUSTER INTEGRATION PANEL
(*7)
(*5)
(*4)
O
W
Y
GR–R
P–L
R–Y
V–G
R–B
R–W
V–W
G–W
G–R
L
W–B
R–L
W–L
GR
GR–B
W–G
R
Y
G–W
W–B(*3)
B–R
B–W
IG
Left side of instrument panel
A
B
C
D
E
F
G
H
I
J
K
L
M
N
O
P
Q
R
S
T
U

2 LS 430 (LHD) (Cont' d)

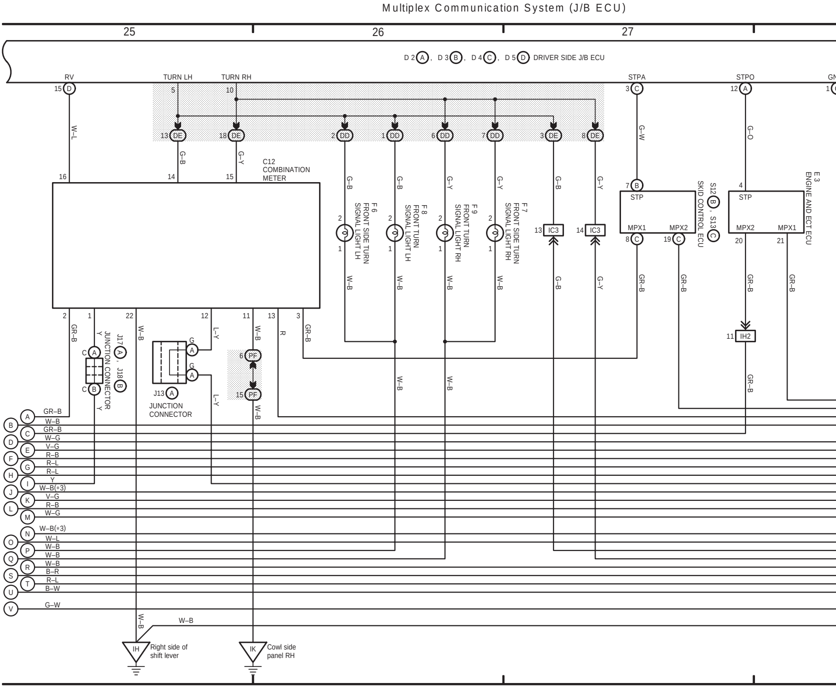
Multiplex Communication System (J/B ECU)
25
26
27
D 2 (A), D 3 (B), D 4 (C), D 5 (D) DRIVER SIDE J/B ECU
RV
TURN LH
TURN RH
STPA
STPO
15 (D)
5
10
3 (C)
12 (A)
W–L
13 (DE)
18 (DE)
2 (DD)
1 (DD)
6 (DD)
7 (DD)
3 (DE)
8 (DE)
G–B
G–Y
G–W
G–O
C12 COMBINATION METER
16
14
15
F 6 FRONT SIDE TURN SIGNAL LIGHT LH
F 8 FRONT TURN SIGNAL LIGHT LH
F 9 FRONT TURN SIGNAL LIGHT RH
F 7 FRONT SIDE TURN SIGNAL LIGHT RH
13 IC3
14 IC3
7 (B)
STP
MPX1
MPX2
8 (C)
19 (C)
S12 (B), S13 (C) SKID CONTROL ECU
4
STP
MPX2
MPX1
20
21
E 3 ENGINE AND ECT ECU
W–B
GR–B
2
1
22
12
11
13
3
L–Y
R
J17 (A), J18 (B) JUNCTION CONNECTOR
C (A)
C (B)
Y
J13 (A) JUNCTION CONNECTOR
G (A)
G (A)
6 (PF)
15 (PF)
11 IH2
A GR–B
B W–B
C GR–B
D W–G
E V–G
F R–B
G R–L
H R–L
I Y
J W–B(∗3)
K V–G
L R–B
M W–G
N W–B(∗3)
O W–L
P W–B
Q W–B
R W–B
S B–R
T R–L
U B–W
V G–W
W–B
IH Right side of shift lever
IK Cowl side panel RH

(Cont. next page)

∗3 : w/ Rear Power Seat
∗8 : w/ Headlight Cleaner

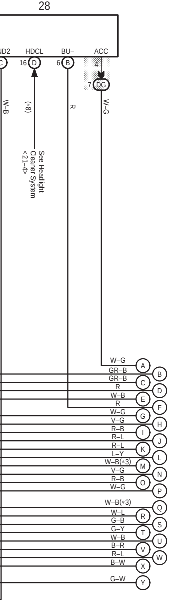
28
ND2
HDCL
BU–
ACC
C
16 D
6 B
4
7 DG
W–B
(∗8)
R
W–G
See Headlight Cleaner System <21–4>
W–G A
GR–B B
GR–B C
R D
W–B E
R F
W–G G
V–G H
R–B I
R–L J
R–L K
L–Y L
W–B(∗3) M
V–G N
R–B O
W–G P
W–B(∗3) Q
W–L R
G–B S
G–Y T
W–B U
B–R V
R–L W
B–W X
G–W Y

2 LS 430 (LHD) (Cont' d)

Multiplex Communication System (J/B ECU)

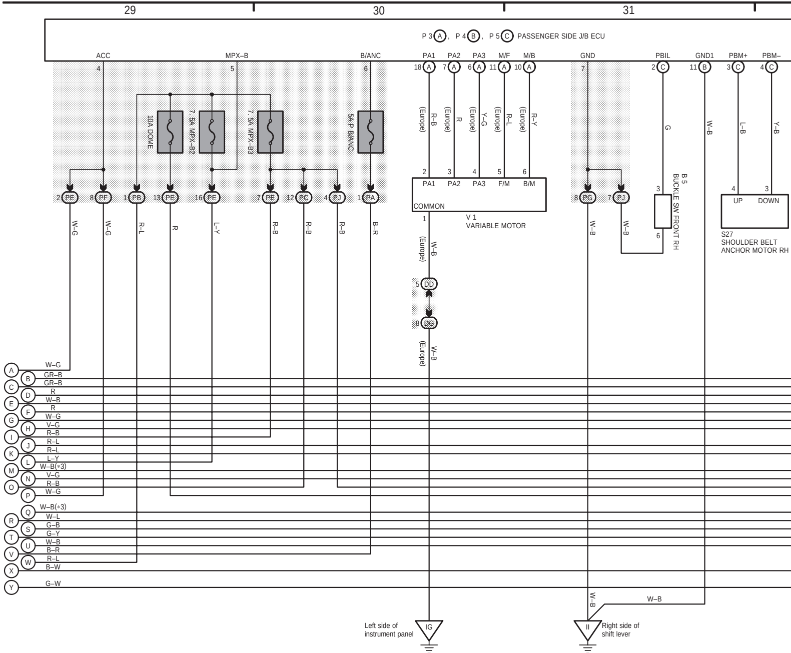
29
30
31
P 3 A, P 4 B, P 5 C PASSENGER SIDE J/B ECU
ACC
MPX–B
B/ANC
PA1
PA2
PA3
M/F
M/B
GND
PBIL
GND1
PBM+
PBM–
4
5
6
18 A
7 A
6 A
11 A
10 A
7
2 C
11 B
3 C
4 C
10A DOME
7. 5A MPX–B2
7. 5A MPX–B3
5A P B/ANC
R–B (Europe)
R (Europe)
Y–G (Europe)
R–L (Europe)
R–Y (Europe)
G
W–B
L–B
Y–B
2 PE
8 PF
1 PB
13 PE
16 PE
7 PE
12 PC
4 PJ
1 PA
8 PG
7 PJ
W–G
W–G
R–L
R
L–Y
R–B
R–B
R–B
B–R
2 3 4 5 6
PA1 PA2 PA3 F/M B/M
COMMON
1
V 1
VARIABLE MOTOR
W–B (Europe)
5 DD
8 DG
W–B (Europe)
W–B
W–B
3
6
B 5
BUCKLE SW FRONT RH
4 3
UP DOWN
S27
SHOULDER BELT ANCHOR MOTOR RH
A W–G
B GR–B
C GR–B
D R
E W–B
F R
G W–G
H V–G
I R–B
J R–L
K R–L
L L–Y
M W–B(∗3)
N V–G
O R–B
P W–G
Q W–B(∗3)
R W–L
S G–B
T G–Y
U W–B
V B–R
W R–L
X B–W
Y G–W
W–B
W–B
IG
Left side of instrument panel
II
Right side of shift lever

(Cont. next page)

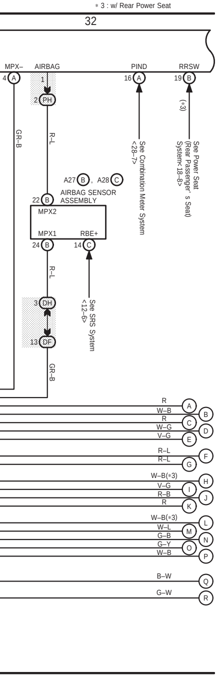

∗ 3 : w/ Rear Power Seat
32
MPX–
AIRBAG
PIND
RRSW
4 A
1
2 PH
16 A
19 B
(∗3)
GR–B
R–L
See Combination Meter System <28–7>
See Power Seat (Rear Passenger' s Seat) System<18–8>
A27 B , A28 C
AIRBAG SENSOR ASSEMBLY
22 B
MPX2
MPX1
RBE+
24 B
14 C
R–L
3 DH
13 DF
See SRS System <12–6>
GR–B
R A
W–B B
R C
W–G D
V–G E
R–L F
R–L G
W–B(∗3) H
V–G I
R–B J
R K
W–B(∗3) L
W–L M
G–B N
G–Y O
W–B P
B–W Q
G–W R

N OVERALL ELECTRICAL WIRING DIAGRAM

LS 430 (EWD435F)

2 LS 430 (LHD) (Cont' d)

Multiplex Communication System (J/B ECU

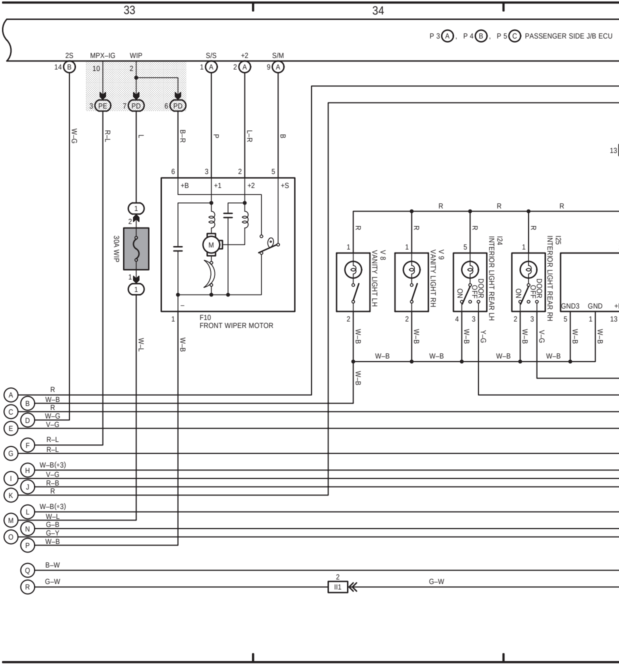

33
34
P 3 A , P 4 B , P 5 C PASSENGER SIDE J/B ECU
2S
MPX–IG
WIP
S/S
+2
S/M
14 B
10
2
1 A
2 A
9 A
3 PE
7 PD
6 PD
W–G
R–L
L
B–R
P
L–R
B
6
3
2
5
+B
+1
+2
+S
1
2
30A WIP
1
1
M
–
1
F10
FRONT WIPER MOTOR
W–L
W–B
R
R
R
R
R
R
R
1
1
5
1
V 8
VANITY LIGHT LH
V 9
VANITY LIGHT RH
I24
INTERIOR LIGHT REAR LH
I25
INTERIOR LIGHT REAR RH
DOOR
OFF
ON
2
2
4
3
2
3
5
1
13
GND3
GND
13
W–B
W–B
W–B
Y–G
W–B
V–G
W–B
W–B
W–B
W–B
W–B
W–B
W–B
A R
B W–B
C R
D W–G
E V–G
F R–L
G R–L
H W–B(∗3)
I V–G
J R–B
K R
L W–B(∗3)
M W–L
N G–B
O G–Y
P W–B
Q B–W
R G–W
2
II1
G–W

(Cont. next page)

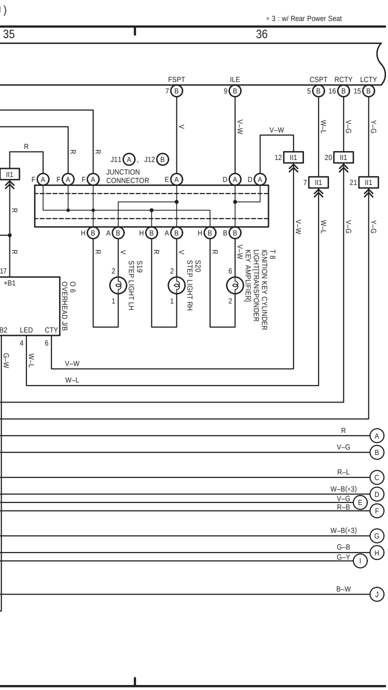
* 3 : w/ Rear Power Seat
35
36
FSPT
ILE
CSPT
RCTY
LCTY
7 B
9 B
5 B
16 B
15 B
V
V–W
W–L
V–G
Y–G
R
J11 A , J12 B
JUNCTION CONNECTOR
F A
E A
D A
H B
A B
B B
12 II1
20 II1
7 II1
21 II1
II1
S19 STEP LIGHT LH
S20 STEP LIGHT RH
T8 IGNITION KEY CYLINDER LIGHT[TRANSPONDER KEY AMPLIFIER]
O 6 OVERHEAD J/B
+B1
B2
LED
CTY
17
4
6
G–W
W–L
V–W
R
V–G
R–L
W–B(*3)
V–G
R–B
W–B(*3)
G–B
G–Y
B–W
A
B
C
D
E
F
G
H
I
J

2 LS 430 (LHD) (Cont' d)

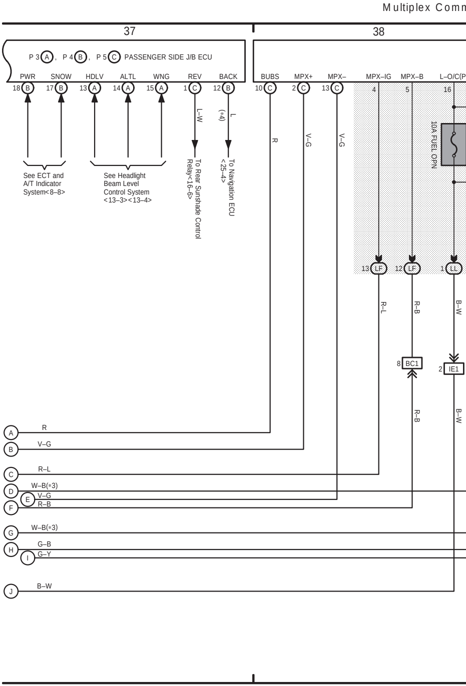
Multiplex Comm
37
38
P 3 A , P 4 B , P 5 C PASSENGER SIDE J/B ECU
PWR
SNOW
HDLV
ALTL
WNG
REV
BACK
BUBS
MPX+
MPX–
MPX–IG
MPX–B
L–O/C(P
18 B
17 B
13 A
14 A
15 A
1 C
12 B
10 C
2 C
13 C
4
5
16
L–W
L
(*4)
R
V–G
V–G
10A FUEL OPN
See ECT and A/T Indicator System<8–8>
See Headlight Beam Level Control System <13–3><13–4>
To Rear Sunshade Control Relay<16–6>
To Navigation ECU <25–4>
13 LF
12 LF
1 LL
R–L
R–B
B–W
8 BC1
2 IE1
R–B
B–W
A
B
C
D
E
F
G
H
I
J
R
V–G
R–L
W–B(*3)
V–G
R–B
W–B(*3)
G–B
G–Y
B–W

(Cont. next page)

unication System (J/B ECU)

* 1 : w/ LEXUS Park Assist(Clearance Sonar)
* 3 : w/ Rear Power Seat
* 4 : w/ LEXUS Navigation System

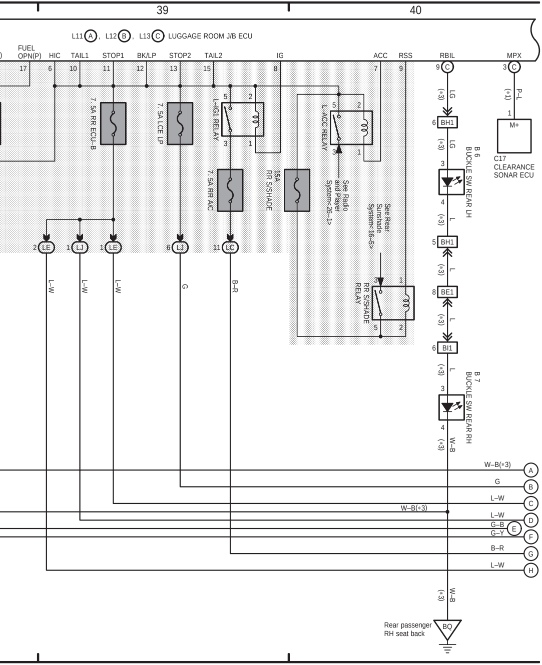
39
40
L11 (A), L12 (B), L13 (C) LUGGAGE ROOM J/B ECU
FUEL OPN(P)
HIC
TAIL1
STOP1
BK/LP
STOP2
TAIL2
IG
ACC
RSS
RBIL
MPX
7. 5A RR ECU–B
7. 5A LCE LP
L–IG1 RELAY
L–ACC RELAY
7. 5A RR A/C
15A RR S/SHADE
See Radio and Player System<26–1>
See Rear Sunshade System<16–5>
RR S/SHADE RELAY
LE
LJ
LC
L–W
G
B–R
LG
(*3)
BH1
B 6 BUCKLE SW REAR LH
BE1
BI1
B 7 BUCKLE SW REAR RH
W–B
P–L
(*1)
M+
C17 CLEARANCE SONAR ECU
W–B(*3)
G–B
G–Y
Rear passenger RH seat back
BQ

N OVERALL ELECTRICAL WIRING DIAGRAM

LS 430 (EWD435F)

2 LS 430 (LHD) (Cont' d)

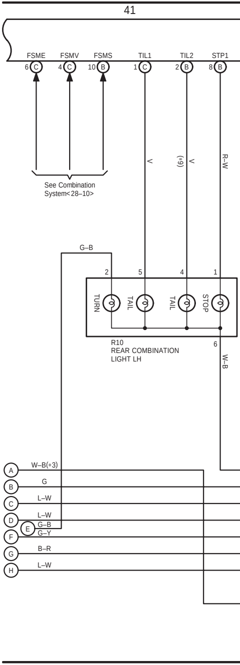
41
FSME
FSMV
FSMS
TIL1
TIL2
STP1
See Combination System<28–10>
V
(*9)
R–W
G–B
TURN
TAIL
TAIL
STOP
R10 REAR COMBINATION LIGHT LH
W–B
W–B(*3)
G
L–W
L–W
G–B
G–Y
B–R
L–W

(Cont. next page)

Multiplex Communication System (J/B ECU)

∗ 3 : w/ Rear Power Seat
∗ 9 : Europe w/o Electronic Modulated Air Suspension, G. C. C.

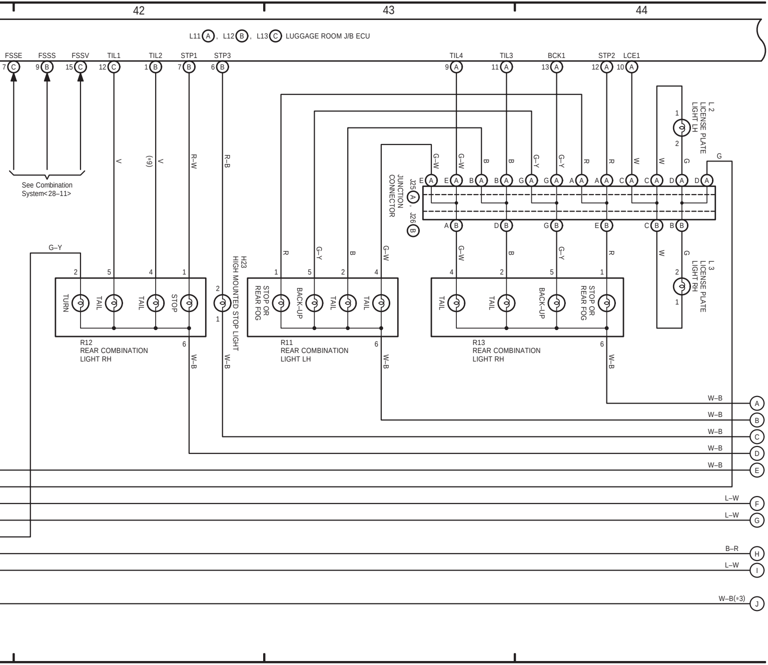
42
43
44
L11 A , L12 B , L13 C LUGGAGE ROOM J/B ECU
FSSE 7 C
FSSS 9 B
FSSV 15 C
TIL1 12 C
TIL2 1 B
STP1 7 B
STP3 6 B
TIL4 9 A
TIL3 11 A
BCK1 13 A
STP2 12 A
LCE1 10 A
See Combination System<28–11>
V
(∗9)
V
R–W
R–B
G–W
G–W
B
B
G–Y
G–Y
R
R
W
W
G
G
J25 A , J26 B
JUNCTION CONNECTOR
L2 LICENSE PLATE LIGHT LH
L3 LICENSE PLATE LIGHT RH
G–Y
TURN
TAIL
TAIL
STOP
R12 REAR COMBINATION LIGHT RH
H23 HIGH MOUNTED STOP LIGHT
STOP OR REAR FOG
BACK–UP
TAIL
TAIL
R11 REAR COMBINATION LIGHT LH
TAIL
TAIL
BACK–UP
STOP OR REAR FOG
R13 REAR COMBINATION LIGHT RH
W–B
W–B
W–B
W–B
W–B A
W–B B
W–B C
W–B D
W–B E
L–W F
L–W G
B–R H
L–W I
W–B(∗3) J

Multiplex Communication System (J/B ECU)

∗ 3 : w/ Rear Power Seat
∗10 : w/ Smart Key System

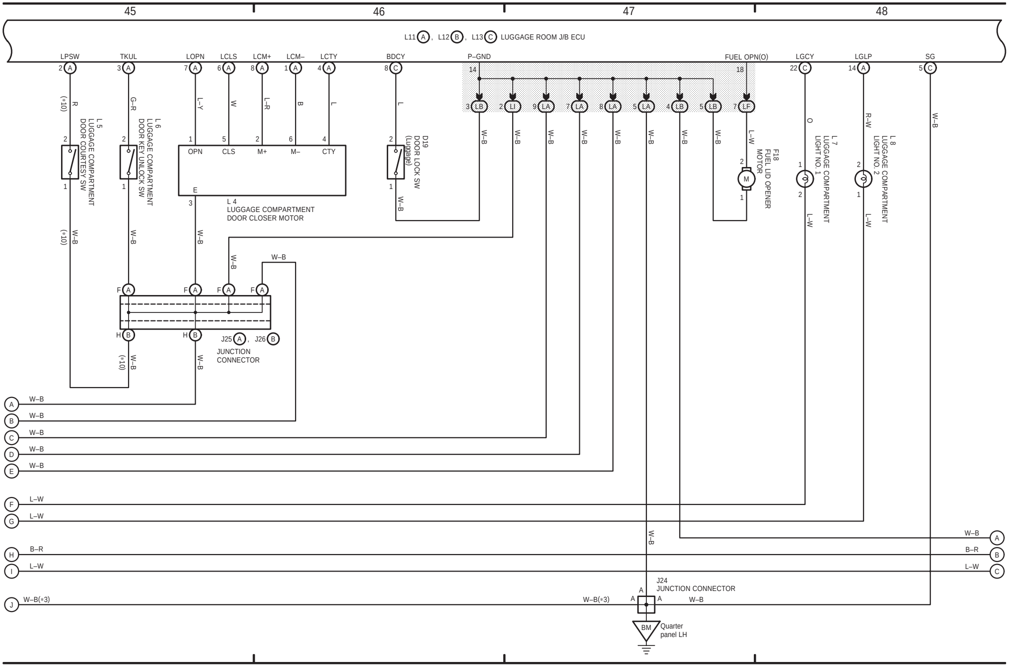
45
46
47
48
L11 (A), L12 (B), L13 (C) LUGGAGE ROOM J/B ECU
LPSW
TKUL
LOPN
LCLS
LCM+
LCM–
LCTY
BDCY
P–GND
FUEL OPN(O)
LGCY
LGLP
SG
2 (A)
3 (A)
7 (A)
6 (A)
8 (A)
1 (A)
4 (A)
8 (C)
14
18
22 (C)
14 (A)
5 (C)
R (∗10)
G–R
L–Y
W
L–R
B
L
L
3 LB
2 LI
9 LA
7 LA
8 LA
5 LA
4 LB
5 LB
7 LF
L 5
LUGGAGE COMPARTMENT
DOOR COURTESY SW
L 6
LUGGAGE COMPARTMENT
DOOR KEY UNLOCK SW
2
1
2
1
1 OPN
5 CLS
2 M+
6 M–
4 CTY
E
3
L 4
LUGGAGE COMPARTMENT
DOOR CLOSER MOTOR
D19
DOOR LOCK SW
(Luggage)
2
1
W–B
F18
FUEL LID OPENER
MOTOR
2
M
1
L–W
O
L 7
LUGGAGE COMPARTMENT
LIGHT NO. 1
1
2
R–W
L 8
LUGGAGE COMPARTMENT
LIGHT NO. 2
2
1
L–W
L–W
W–B
W–B (∗10)
W–B
W–B
W–B
W–B
F (A)
F (A)
F (A)
F (A)
H (B)
H (B)
J25 (A), J26 (B)
JUNCTION
CONNECTOR
W–B (∗10)
W–B
(A) W–B
(B) W–B
(C) W–B
(D) W–B
(E) W–B
(F) L–W
(G) L–W
(H) B–R
(I) L–W
(J) W–B(∗3)
W–B (A)
B–R (B)
L–W (C)
J24
JUNCTION CONNECTOR
A
A
A
W–B(∗3)
W–B
BM
Quarter
panel LH

Multiplex Communication System (J/B ECU)

∗ 7 : w/ Rear Cooler
∗11 : w/o Rear Cooler

49 50 51 52

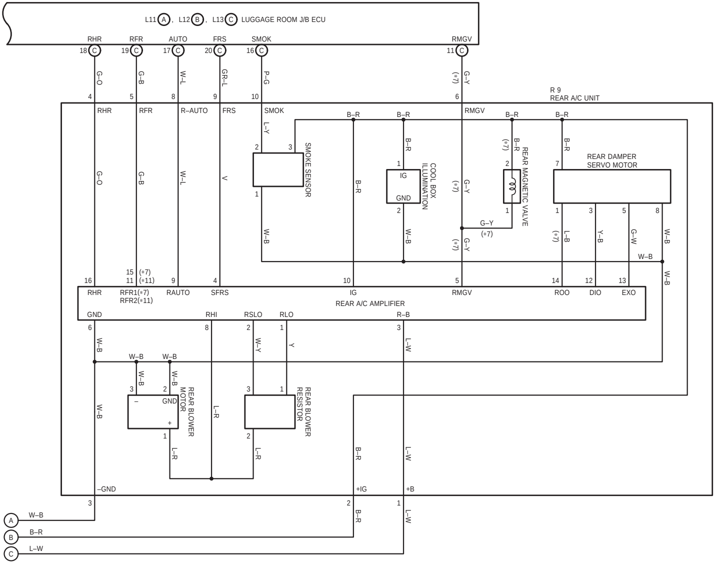
L11 A, L12 B, L13 C LUGGAGE ROOM J/B ECU
RHR
RFR
AUTO
FRS
SMOK
RMGV
18 C
19 C
17 C
20 C
16 C
11 C
G–O
G–B
W–L
GR–L
P–G
(∗7) G–Y
R 9
REAR A/C UNIT
RHR
RFR
R–AUTO
FRS
SMOK
RMGV
L–Y
B–R
SMOKE SENSOR
COOL BOX ILLUMINATION
IG
GND
REAR MAGNETIC VALVE
G–Y (∗7)
REAR DAMPER SERVO MOTOR
L–B
Y–B
G–W
W–B
V
16 15 (∗7) 11 (∗11) 9 4 10 5 14 12 13
RHR
RFR1(∗7)
RFR2(∗11)
RAUTO
SFRS
IG
RMGV
ROO
DIO
EXO
REAR A/C AMPLIFIER
GND
RHI
RSLO
RLO
R–B
W–Y
Y
L–W
L–R
REAR BLOWER MOTOR
REAR BLOWER RESISTOR
–GND
+IG
+B
A W–B
B B–R
C L–W