27 LS 430 (RHD)

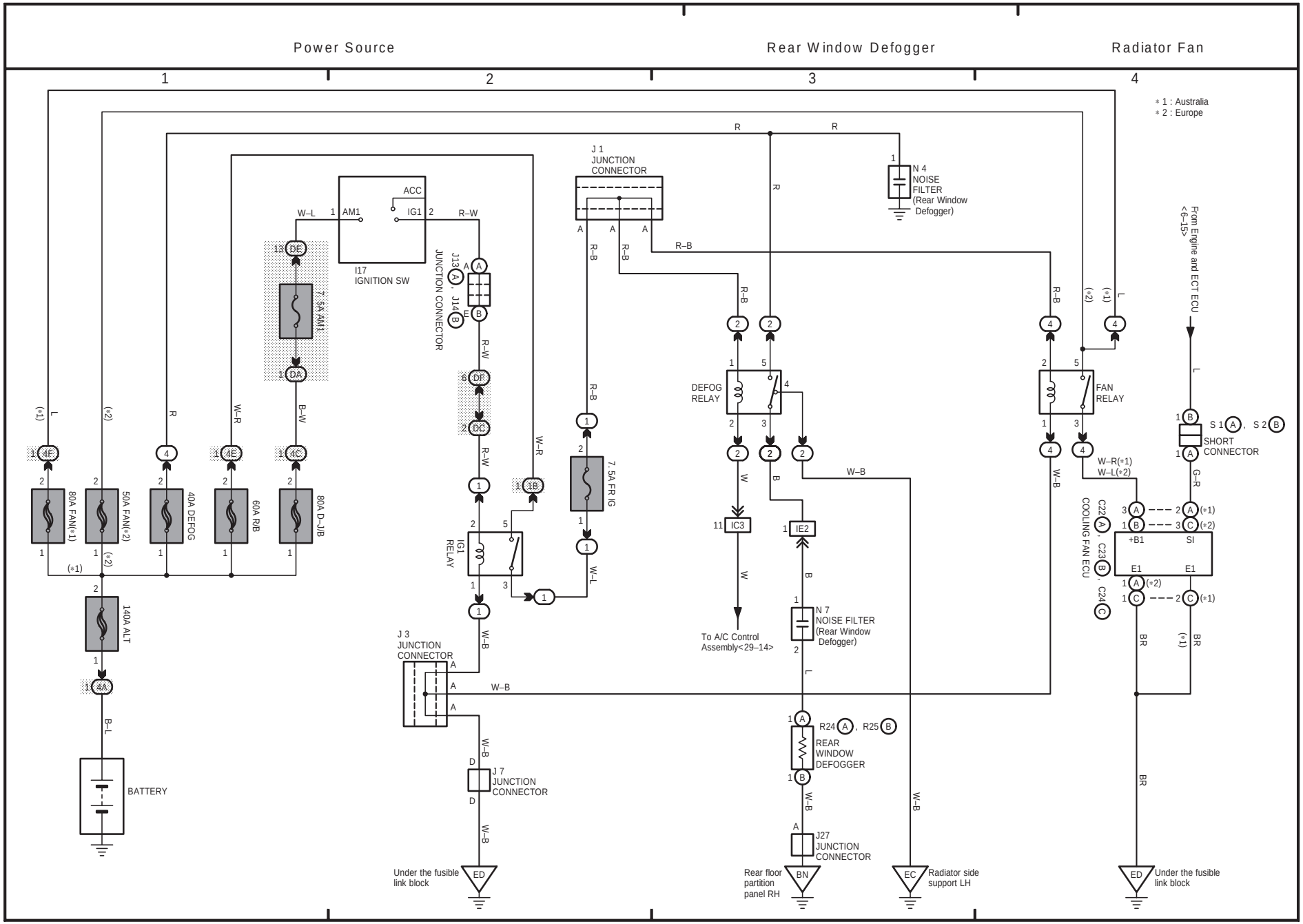
Power Source
Rear Window Defogger
Radiator Fan
1
2
3
4
* 1 : Australia
* 2 : Europe
J 1 JUNCTION CONNECTOR
N 4 NOISE FILTER (Rear Window Defogger)
ACC
AM1
IG1
I17 IGNITION SW
J13, J14 JUNCTION CONNECTOR
7. 5A AM1
DEFOG RELAY
FAN RELAY
IG1 RELAY
7. 5A FR IG
IC3
IE2
To A/C Control Assembly<29–14>
N 7 NOISE FILTER (Rear Window Defogger)
R24, R25
REAR WINDOW DEFOGGER
J27 JUNCTION CONNECTOR
J 3 JUNCTION CONNECTOR
J 7 JUNCTION CONNECTOR
80A FAN(*1)
50A FAN(*2)
40A DEFOG
60A R/B
80A D–J/B
140A ALT
BATTERY
Under the fusible link block
Rear floor partition panel RH
Radiator side support LH
From Engine and ECT ECU <6–15>
S 1, S 2
SHORT CONNECTOR
W–R(*1)
W–L(*2)
C22, C23, C24
COOLING FAN ECU
+B1
SI
E1