(Cont. next page)

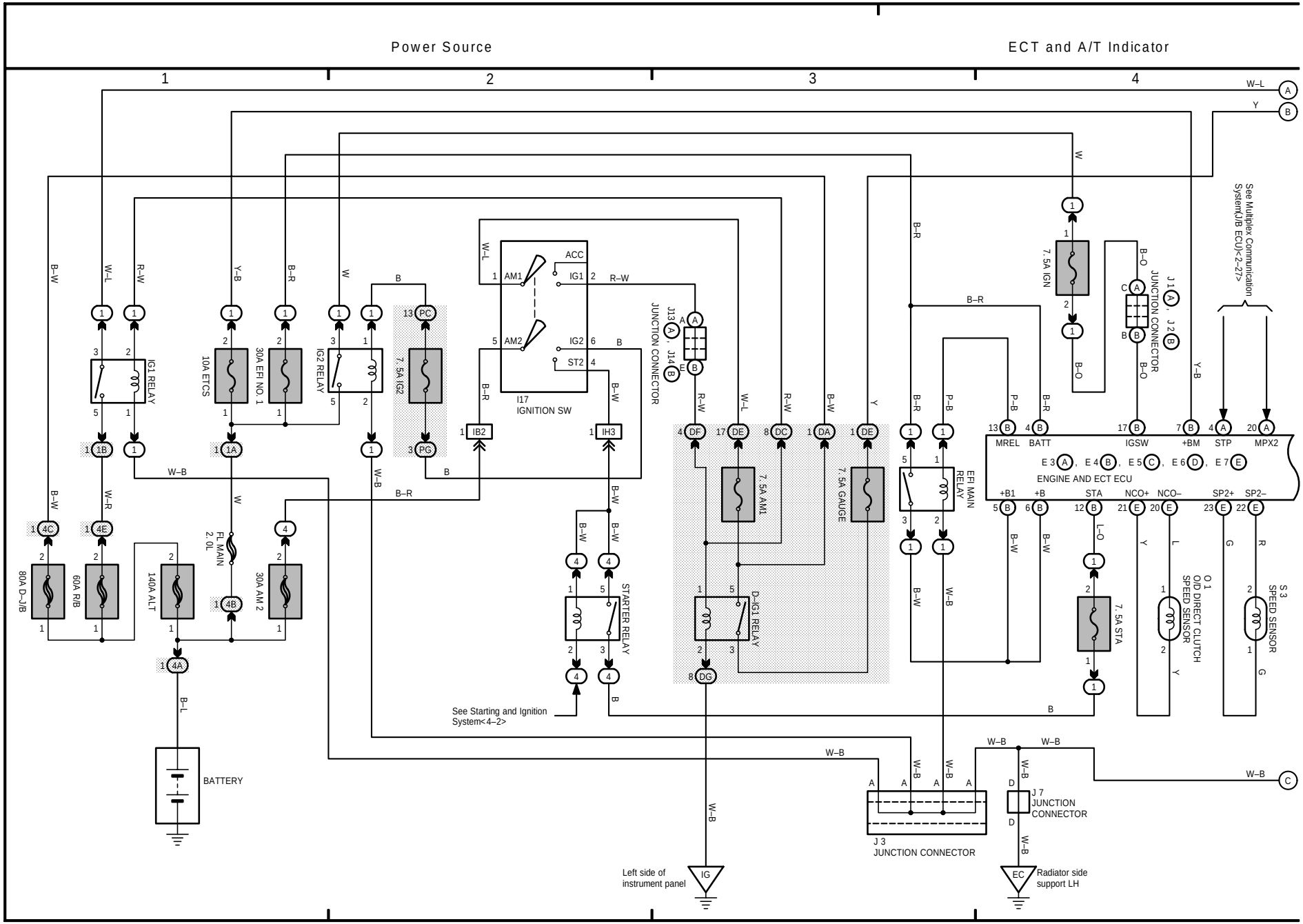

8 LS 430 (LHD) (Cont' d)

(Cont. next page)

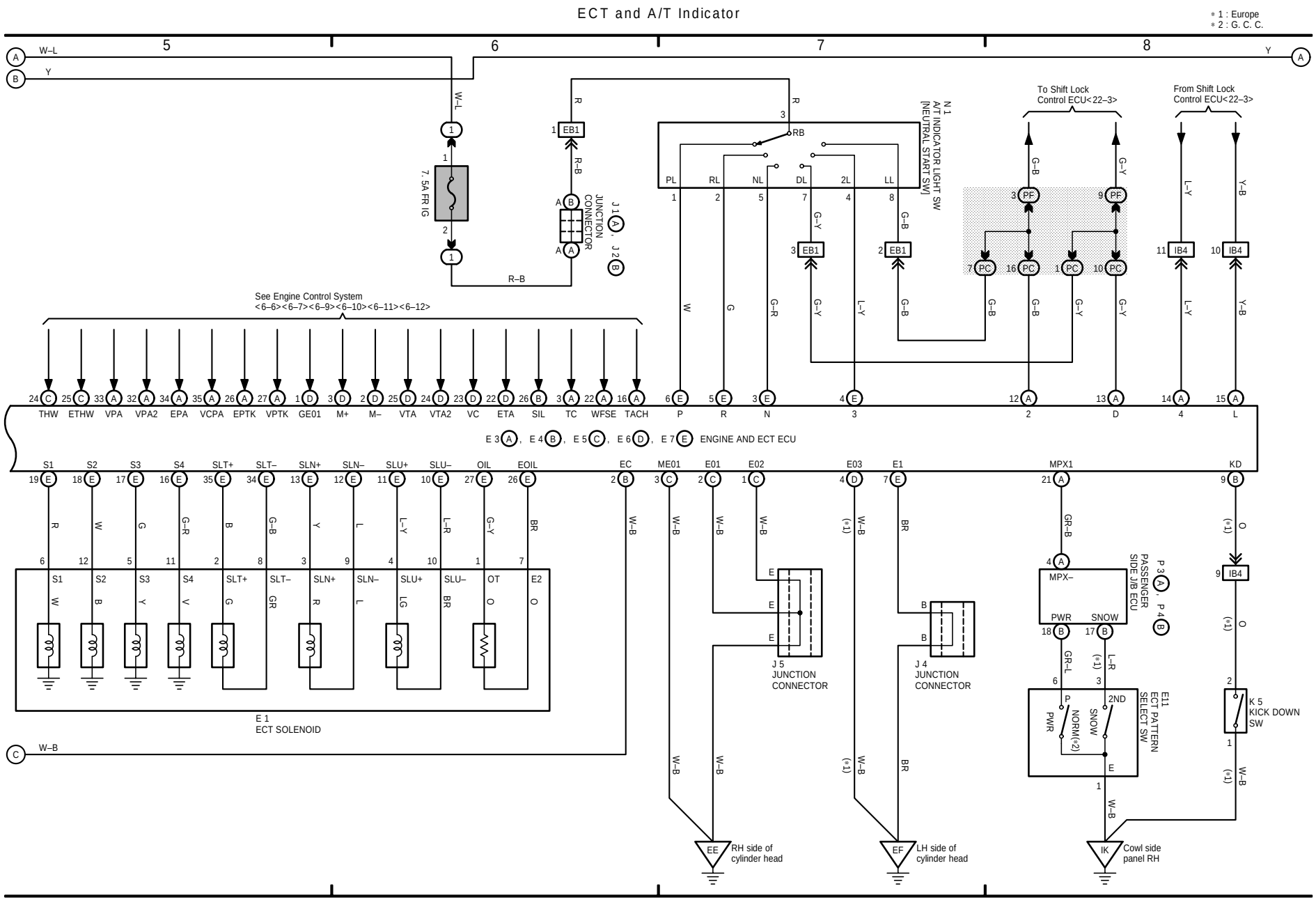

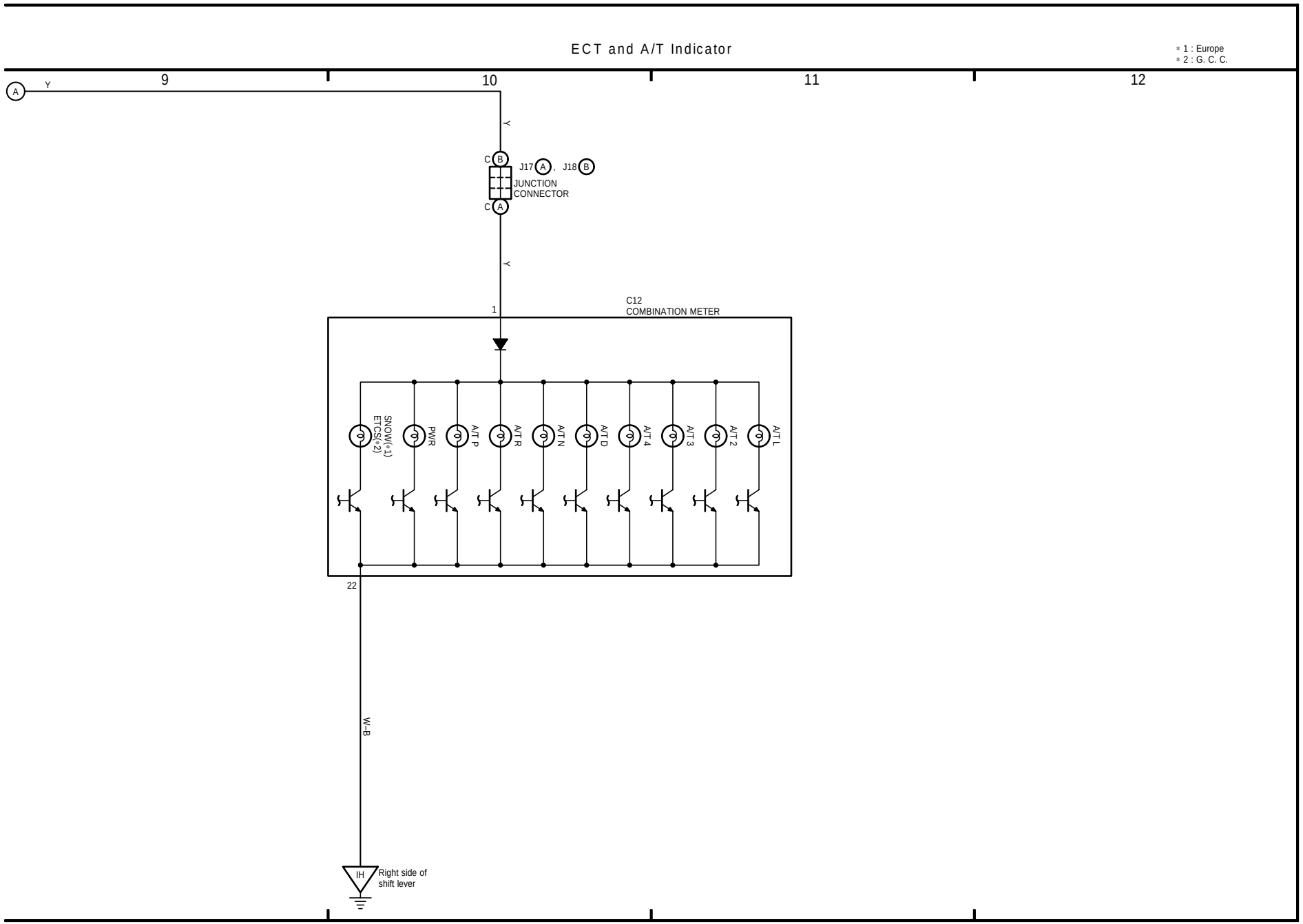
ECT and A/T Indicator
* 1 : Europe
* 2 : G. C. C.
9
10
11
12
A
Y
Y
C
B
J17
A
J18
B
JUNCTION
CONNECTOR
C
A
Y
1
C12
COMBINATION METER
SNOW(*1)
ETCS(*2)
PWR
A/T P
A/T R
A/T N
A/T D
A/T 4
A/T 3
A/T 2
A/T L
22
W–B
IH
Right side of
shift lever