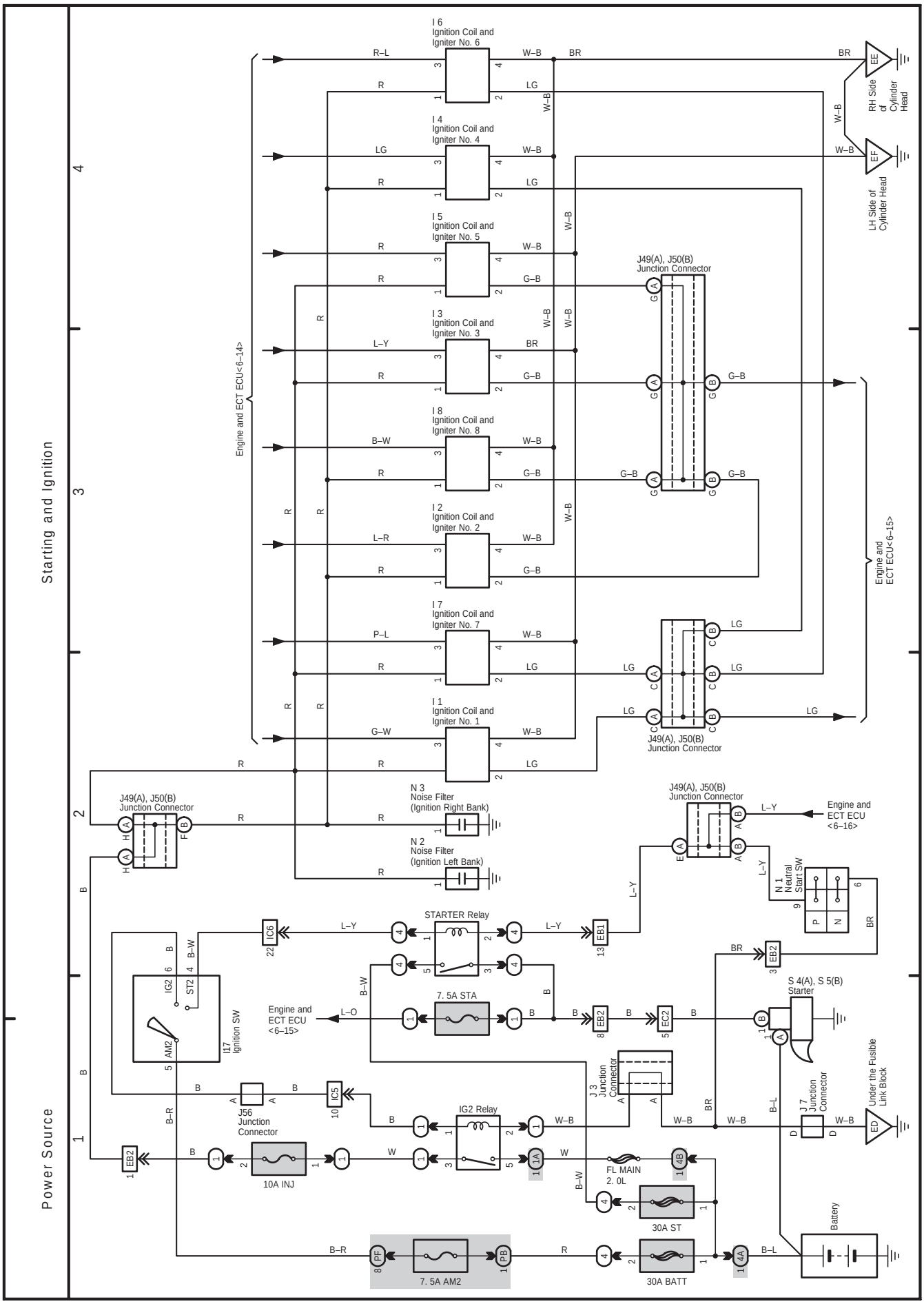
4 LS 430 (RHD)
Power Source
Starting and Ignition
I 6 Ignition Coil and Igniter No. 6
I 4 Ignition Coil and Igniter No. 4
I 5 Ignition Coil and Igniter No. 5
I 3 Ignition Coil and Igniter No. 3
I 8 Ignition Coil and Igniter No. 8
I 2 Ignition Coil and Igniter No. 2
I 7 Ignition Coil and Igniter No. 7
I 1 Ignition Coil and Igniter No. 1
Engine and ECT ECU<6–14>
Engine and ECT ECU<6–15>
RH Side of Cylinder Head
LH Side of Cylinder Head
J49(A), J50(B) Junction Connector
N 3 Noise Filter (Ignition Right Bank)
N 2 Noise Filter (Ignition Left Bank)
STARTER Relay
7. 5A STA
IG2 Relay
10A INJ
FL MAIN 2. 0L
30A ST
30A BATT
7. 5A AM2
I17 Ignition SW
J56 Junction Connector
J 3 Junction Connector
J 7 Junction Connector
N 1 Neutral Start SW
S 4(A), S 5(B) Starter
Under the Fusible Link Block
Battery