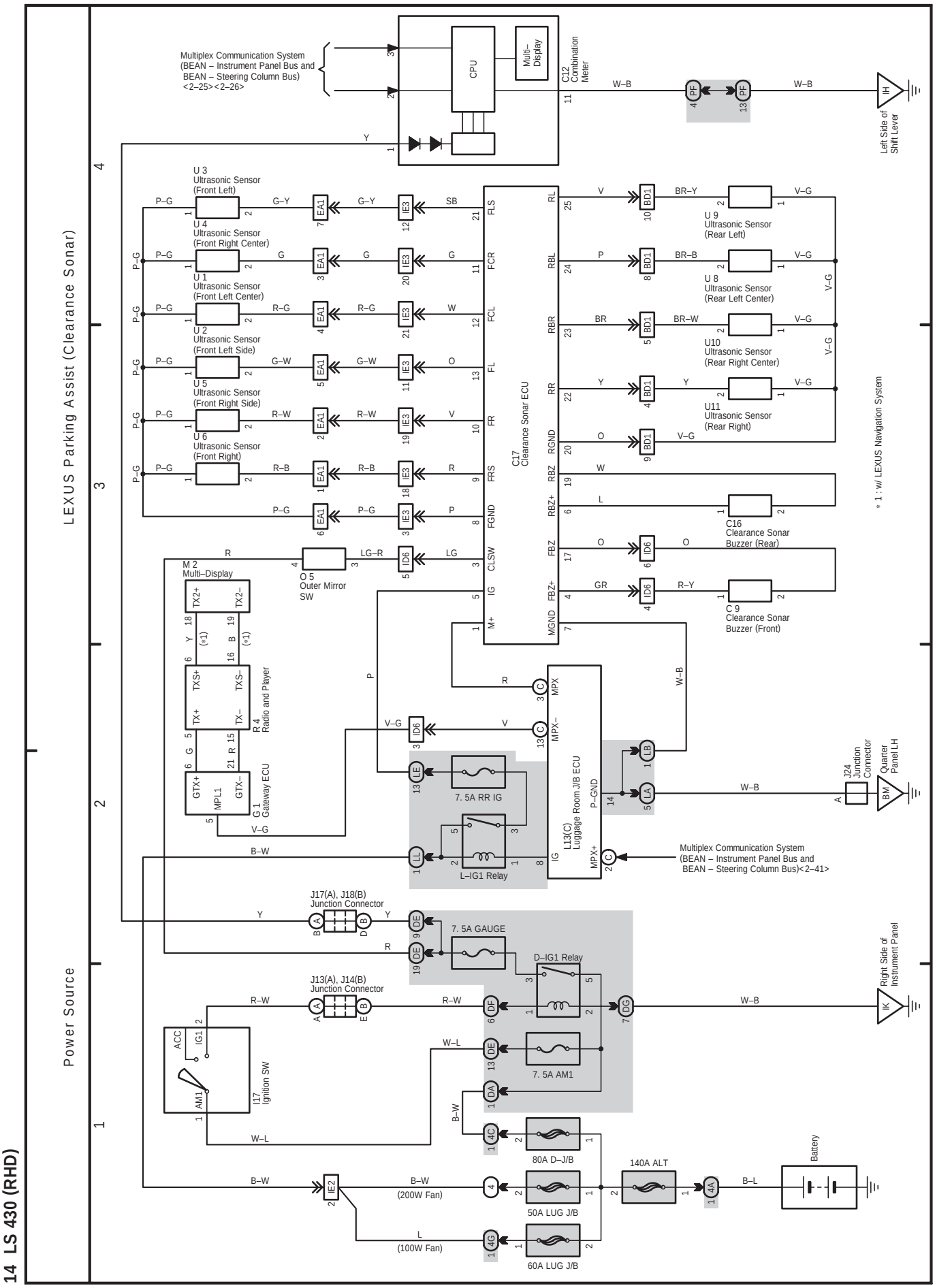
LEXUS Parking Assist (Clearance Sonar)
Power Source
Multiplex Communication System (BEAN – Instrument Panel Bus and BEAN – Steering Column Bus) <2–25><2–26>
CPU
Multi–Display
C12 Combination Meter
Left Side of Shift Lever
U 3 Ultrasonic Sensor (Front Left)
U 4 Ultrasonic Sensor (Front Right Center)
U 1 Ultrasonic Sensor (Front Left Center)
U 2 Ultrasonic Sensor (Front Left Side)
U 5 Ultrasonic Sensor (Front Right Side)
U 6 Ultrasonic Sensor (Front Right)
U 9 Ultrasonic Sensor (Rear Left)
U 8 Ultrasonic Sensor (Rear Left Center)
U10 Ultrasonic Sensor (Rear Right Center)
U11 Ultrasonic Sensor (Rear Right)
C17 Clearance Sonar ECU
C16 Clearance Sonar Buzzer (Rear)
C 9 Clearance Sonar Buzzer (Front)
O 5 Outer Mirror SW
M 2 Multi–Display
R 4 Radio and Player
G 1 Gateway ECU
L13(C) Luggage Room J/B ECU
7. 5A RR IG
L–IG1 Relay
J24 Junction Connector
Quarter Panel LH
Multiplex Communication System (BEAN – Instrument Panel Bus and BEAN – Steering Column Bus)<2–41>
J17(A), J18(B) Junction Connector
7. 5A GAUGE
D–IG1 Relay
J13(A), J14(B) Junction Connector
7. 5A AM1
I17 Ignition SW
Right Side of Instrument Panel
80A D–J/B
140A ALT
Battery
B–W (200W Fan)
L (100W Fan)
50A LUG J/B
60A LUG J/B
* 1 : w/ LEXUS Navigation System

14 LS 430 (RHD)