Position of Parts in Engine Compartment

[LHD]

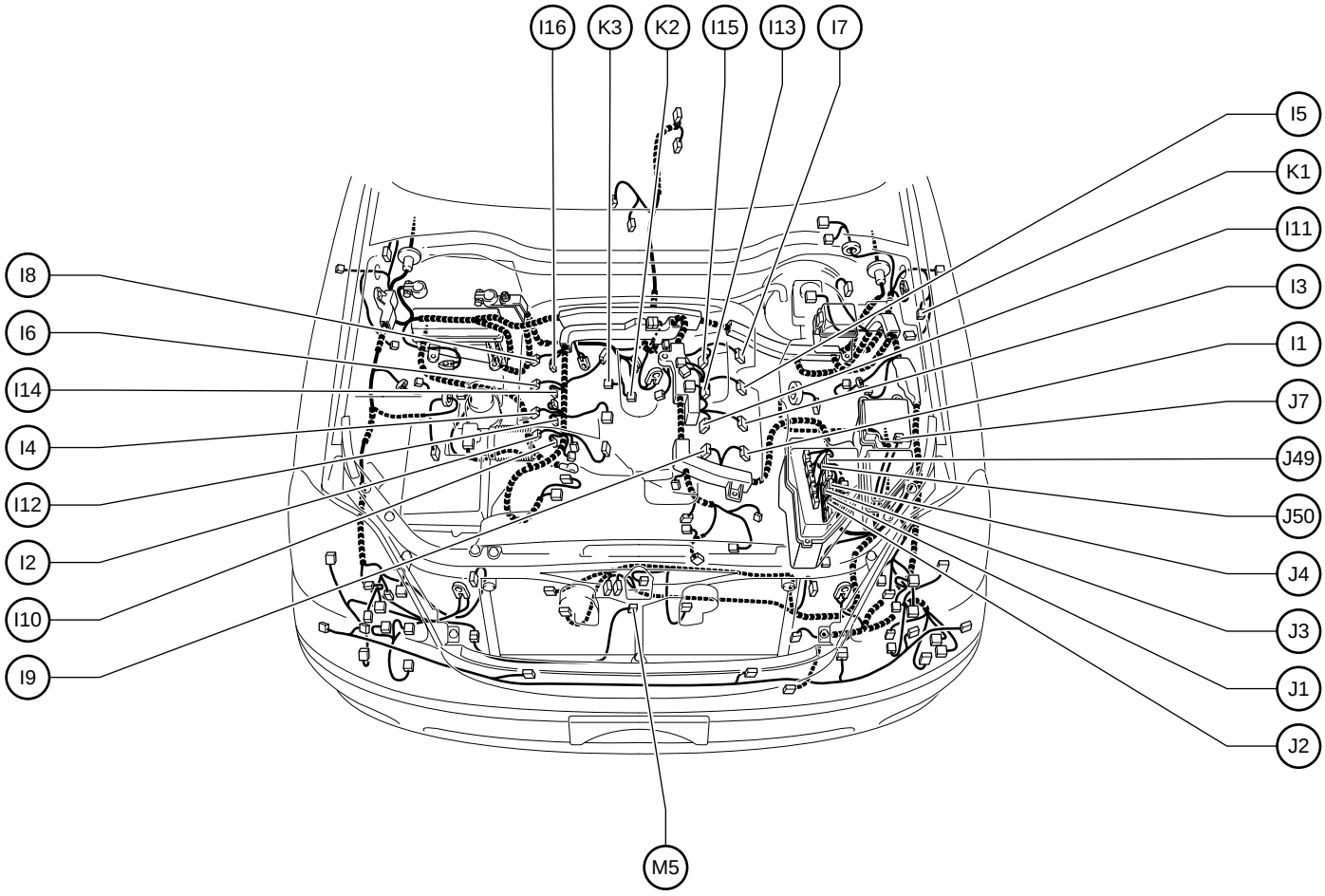

I 1 Ignition Coil and Igniter No.1
I 2 Ignition Coil and Igniter No.2
I 3 Ignition Coil and Igniter No.3
I 4 Ignition Coil and Igniter No.4
I 5 Ignition Coil and Igniter No.5
I 6 Ignition Coil and Igniter No.6
I 7 Ignition Coil and Igniter No.7
I 8 Ignition Coil and Igniter No.8
I 9 Injector No.1
I 10 Injector No.2
I 11 Injector No.3
I 12 Injector No.4
I 13 Injector No.5
I 14 Injector No.6
I 15 Injector No.7
I 16 Injector No.8

J 1 Junction Connector
J 2 Junction Connector
J 3 Junction Connector
J 4 Junction Connector
J 7 Junction Connector
J 49 Junction Connector
J 50 Junction Connector

K 1 Keyless Buzzer
K 2 Knock Sensor (Bank 1)
K 3 Knock Sensor (Bank 2)

M 5 Millimeter Wave Radar Sensor