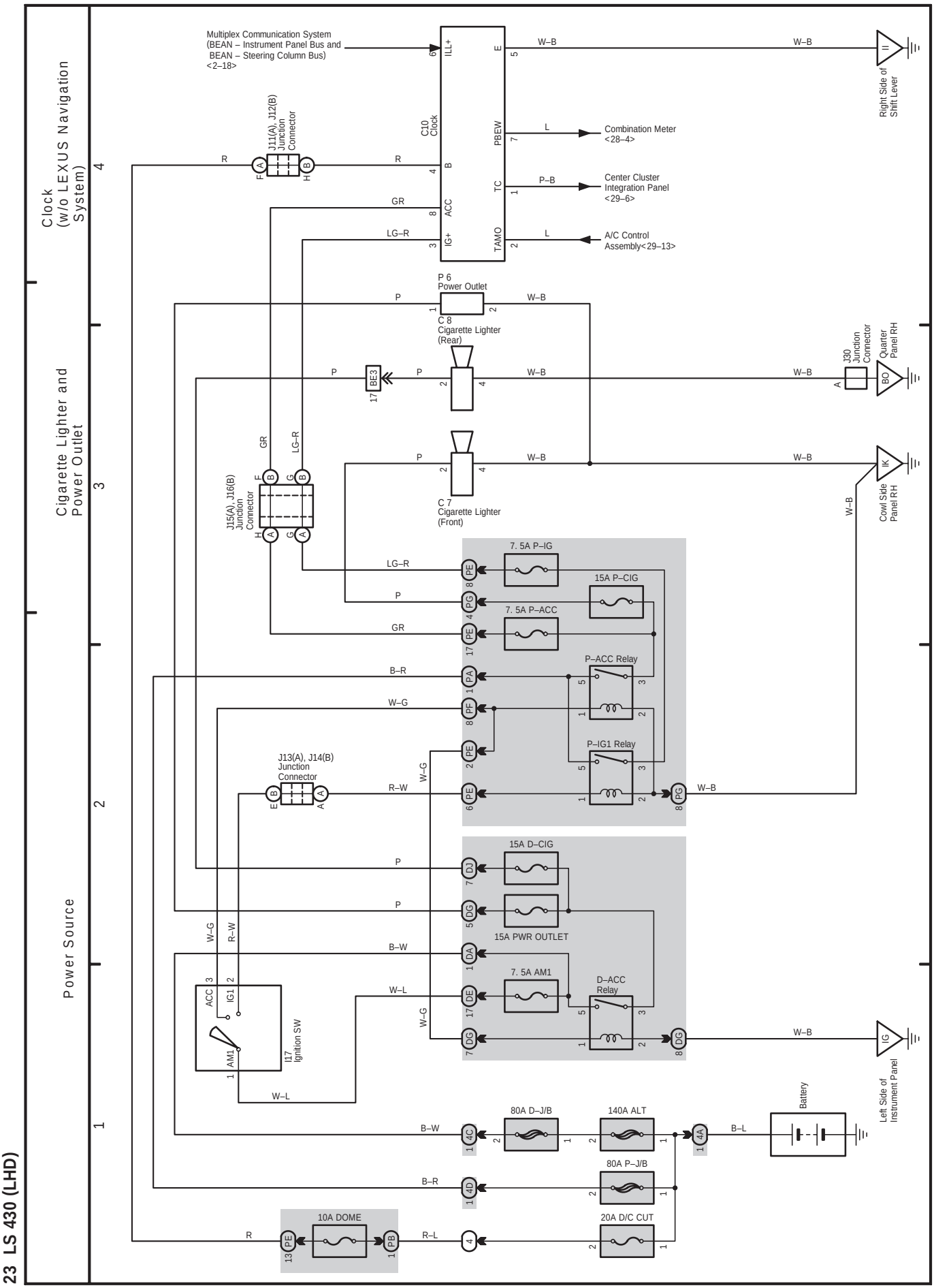
23 LS 430 (LHD)
Clock (w/o LEXUS Navigation System)
Cigarette Lighter and Power Outlet
Power Source
Multiplex Communication System (BEAN – Instrument Panel Bus and BEAN – Steering Column Bus) <2–18>
C10 Clock
ILL+
B
ACC
IG+
E
PBEW
TC
TAMO
Combination Meter <28–4>
Center Cluster Integration Panel <29–6>
A/C Control Assembly<29–13>
Right Side of Shift Lever
J11(A), J12(B) Junction Connector
P 6 Power Outlet
C 8 Cigarette Lighter (Rear)
C 7 Cigarette Lighter (Front)
J30 Junction Connector
Quarter Panel RH
Cowl Side Panel RH
J15(A), J16(B) Junction Connector
7. 5A P–IG
15A P–CIG
7. 5A P–ACC
P–ACC Relay
P–IG1 Relay
J13(A), J14(B) Junction Connector
15A D–CIG
15A PWR OUTLET
7. 5A AM1
D–ACC Relay
I17 Ignition SW
ACC
IG1
AM1
Left Side of Instrument Panel
Battery
80A D–J/B
140A ALT
80A P–J/B
10A DOME
20A D/C CUT