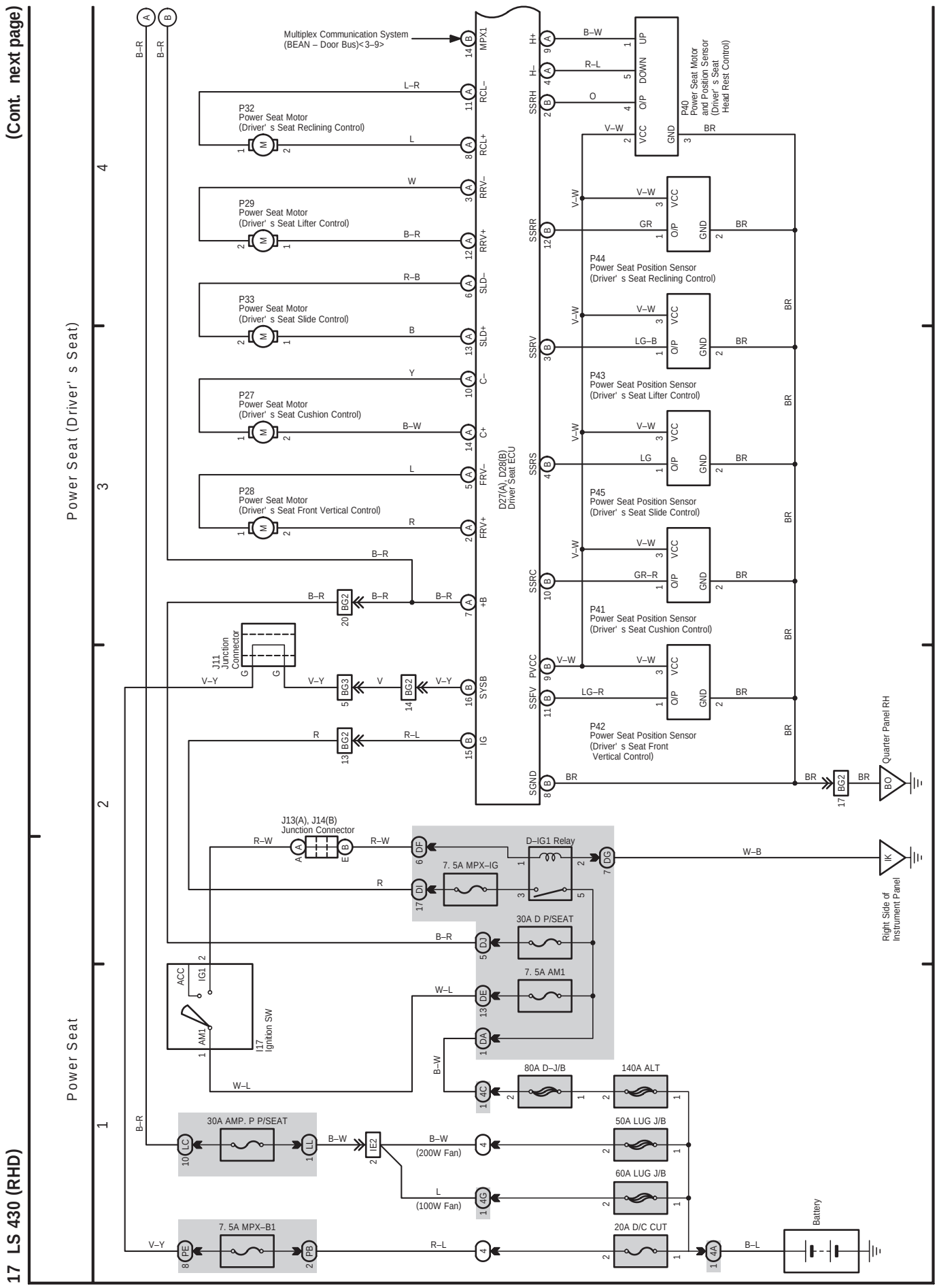
(Cont. next page)
Power Seat (Driver' s Seat)
Power Seat
Multiplex Communication System
(BEAN – Door Bus)<3–9>
P32
Power Seat Motor
(Driver' s Seat Reclining Control)
P29
Power Seat Motor
(Driver' s Seat Lifter Control)
P33
Power Seat Motor
(Driver' s Seat Slide Control)
P27
Power Seat Motor
(Driver' s Seat Cushion Control)
P28
Power Seat Motor
(Driver' s Seat Front Vertical Control)
D27(A), D28(B)
Driver Seat ECU
P40
Power Seat Motor
and Position Sensor
(Driver' s Seat
Head Rest Control)
P44
Power Seat Position Sensor
(Driver' s Seat Reclining Control)
P43
Power Seat Position Sensor
(Driver' s Seat Lifter Control)
P45
Power Seat Position Sensor
(Driver' s Seat Slide Control)
P41
Power Seat Position Sensor
(Driver' s Seat Cushion Control)
P42
Power Seat Position Sensor
(Driver' s Seat Front
Vertical Control)
Quarter Panel RH
J11
Junction
Connector
J13(A), J14(B)
Junction Connector
D–IG1 Relay
7. 5A MPX–IG
30A D P/SEAT
7. 5A AM1
I17
Ignition SW
ACC
IG1
AM1
80A D–J/B
140A ALT
30A AMP. P P/SEAT
50A LUG J/B
60A LUG J/B
(200W Fan)
(100W Fan)
7. 5A MPX–B1
20A D/C CUT
Battery
Right Side of
Instrument Panel
17 LS 430 (RHD)

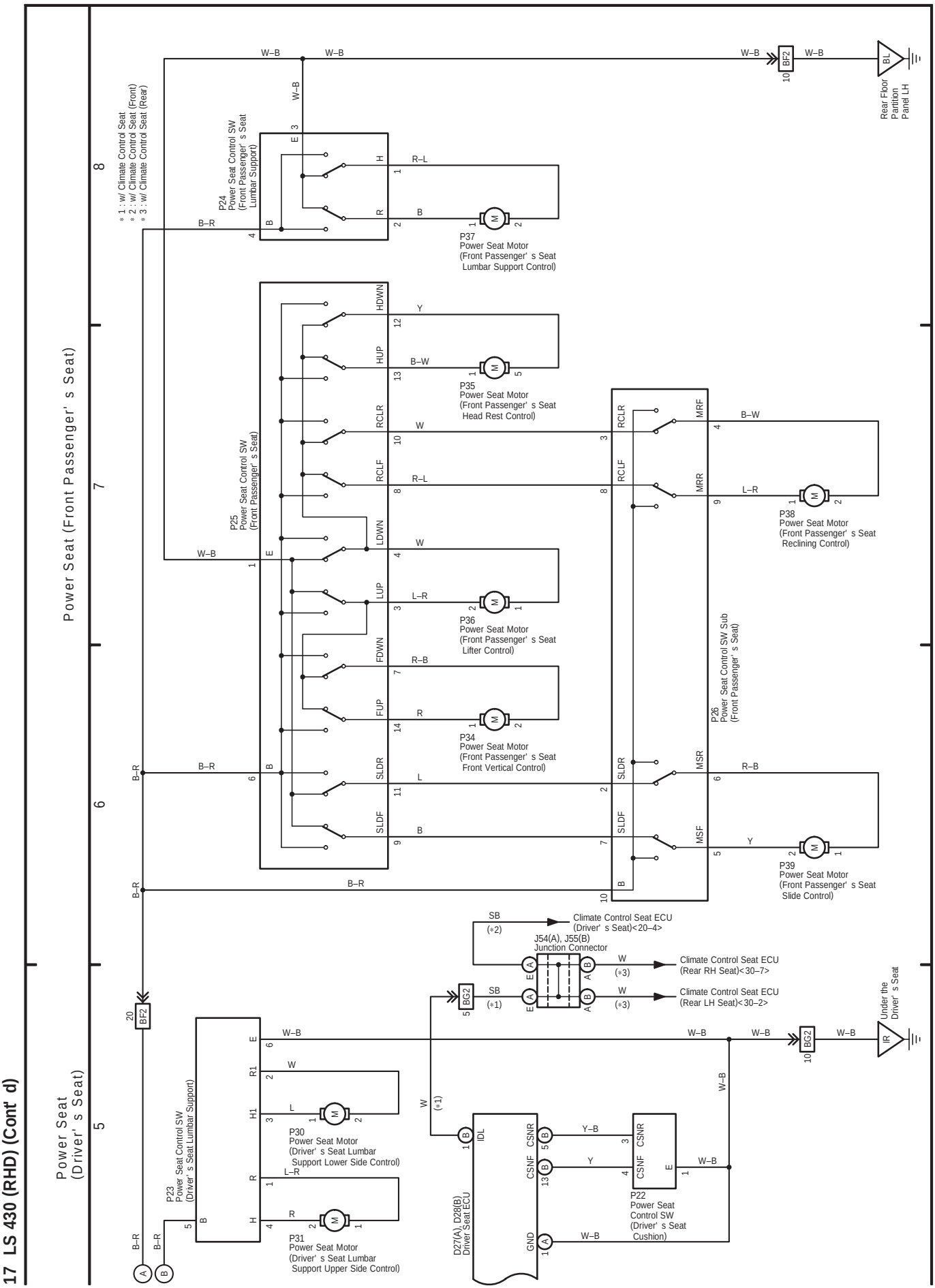
17 LS 430 (RHD) (Cont' d)
Power Seat (Front Passenger' s Seat)
Power Seat (Driver' s Seat)
* 1 : w/ Climate Control Seat
* 2 : w/ Climate Control Seat (Front)
* 3 : w/ Climate Control Seat (Rear)
P24 Power Seat Control SW (Front Passenger' s Seat Lumbar Support)
P37 Power Seat Motor (Front Passenger' s Seat Lumbar Support Control)
P25 Power Seat Control SW (Front Passenger' s Seat)
P35 Power Seat Motor (Front Passenger' s Seat Head Rest Control)
P36 Power Seat Motor (Front Passenger' s Seat Lifter Control)
P34 Power Seat Motor (Front Passenger' s Seat Front Vertical Control)
P26 Power Seat Control SW Sub (Front Passenger' s Seat)
P38 Power Seat Motor (Front Passenger' s Seat Reclining Control)
P39 Power Seat Motor (Front Passenger' s Seat Slide Control)
Rear Floor Partition Panel LH
Climate Control Seat ECU (Driver' s Seat)<20–4>
J54(A), J55(B) Junction Connector
Climate Control Seat ECU (Rear RH Seat)<30–7>
Climate Control Seat ECU (Rear LH Seat)<30–2>
Under the Driver' s Seat
P23 Power Seat Control SW (Driver' s Seat Lumbar Support)
P30 Power Seat Motor (Driver' s Seat Lumbar Support Lower Side Control)
P31 Power Seat Motor (Driver' s Seat Lumbar Support Upper Side Control)
D27(A), D28(B) Driver Seat ECU
P22 Power Seat Control SW (Driver' s Seat Cushion)