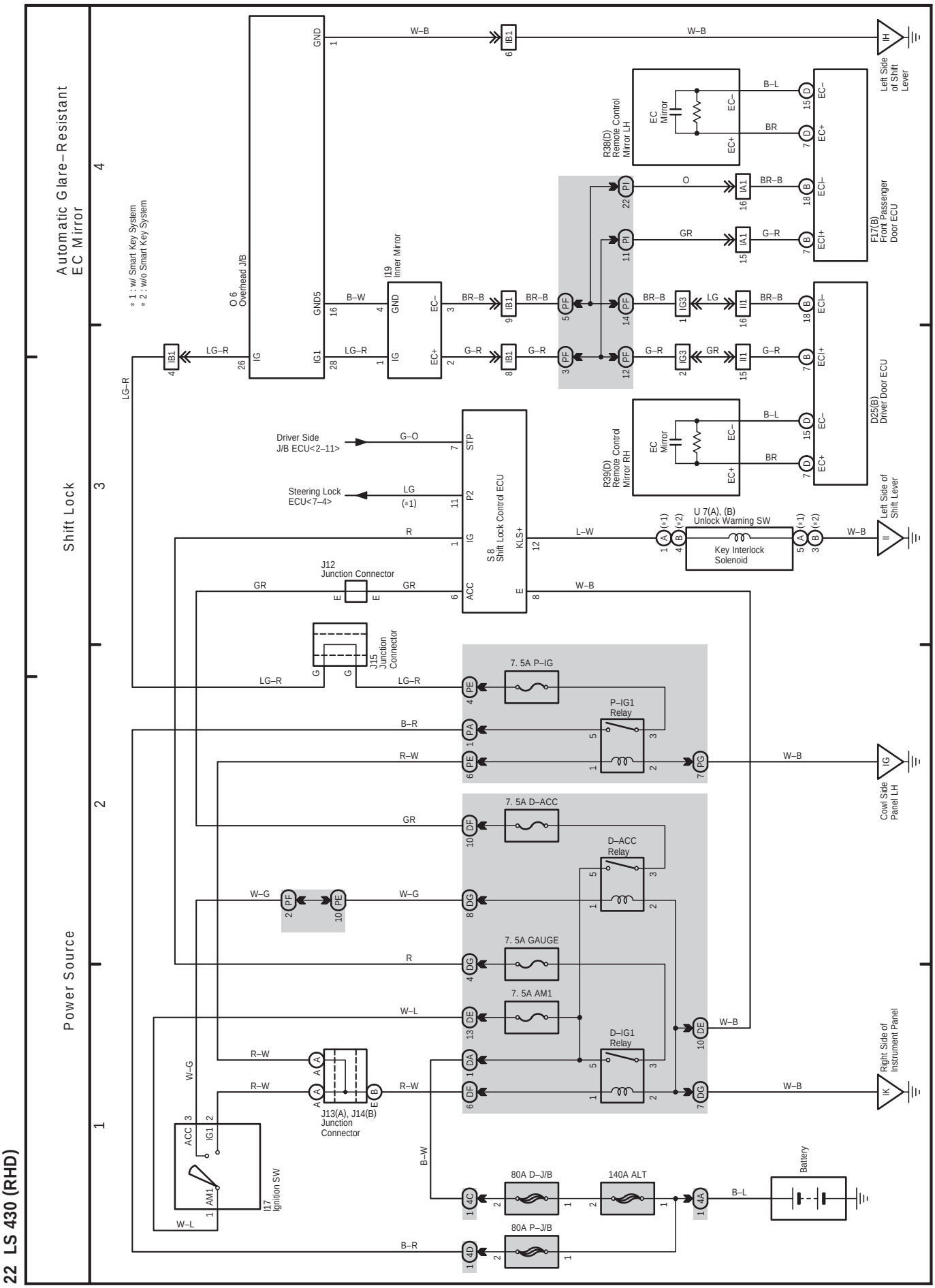
Automatic Glare–Resistant EC Mirror
Shift Lock
Power Source
* 1 : w/ Smart Key System
* 2 : w/o Smart Key System
O 6 Overhead J/B
I19 Inner Mirror
R38(D) Remote Control Mirror LH
R39(D) Remote Control Mirror RH
EC Mirror
F17(B) Front Passenger Door ECU
D25(B) Driver Door ECU
Left Side of Shift Lever
Driver Side J/B ECU<2–11>
Steering Lock ECU<7–4>
S 8 Shift Lock Control ECU
U 7(A), (B) Unlock Warning SW
Key Interlock Solenoid
J12 Junction Connector
J15 Junction Connector
7. 5A P–IG
P–IG1 Relay
Cowl Side Panel LH
7. 5A D–ACC
D–ACC Relay
7. 5A GAUGE
7. 5A AM1
D–IG1 Relay
Right Side of Instrument Panel
J13(A), J14(B) Junction Connector
I17 Ignition SW
80A D–J/B
140A ALT
80A P–J/B
Battery