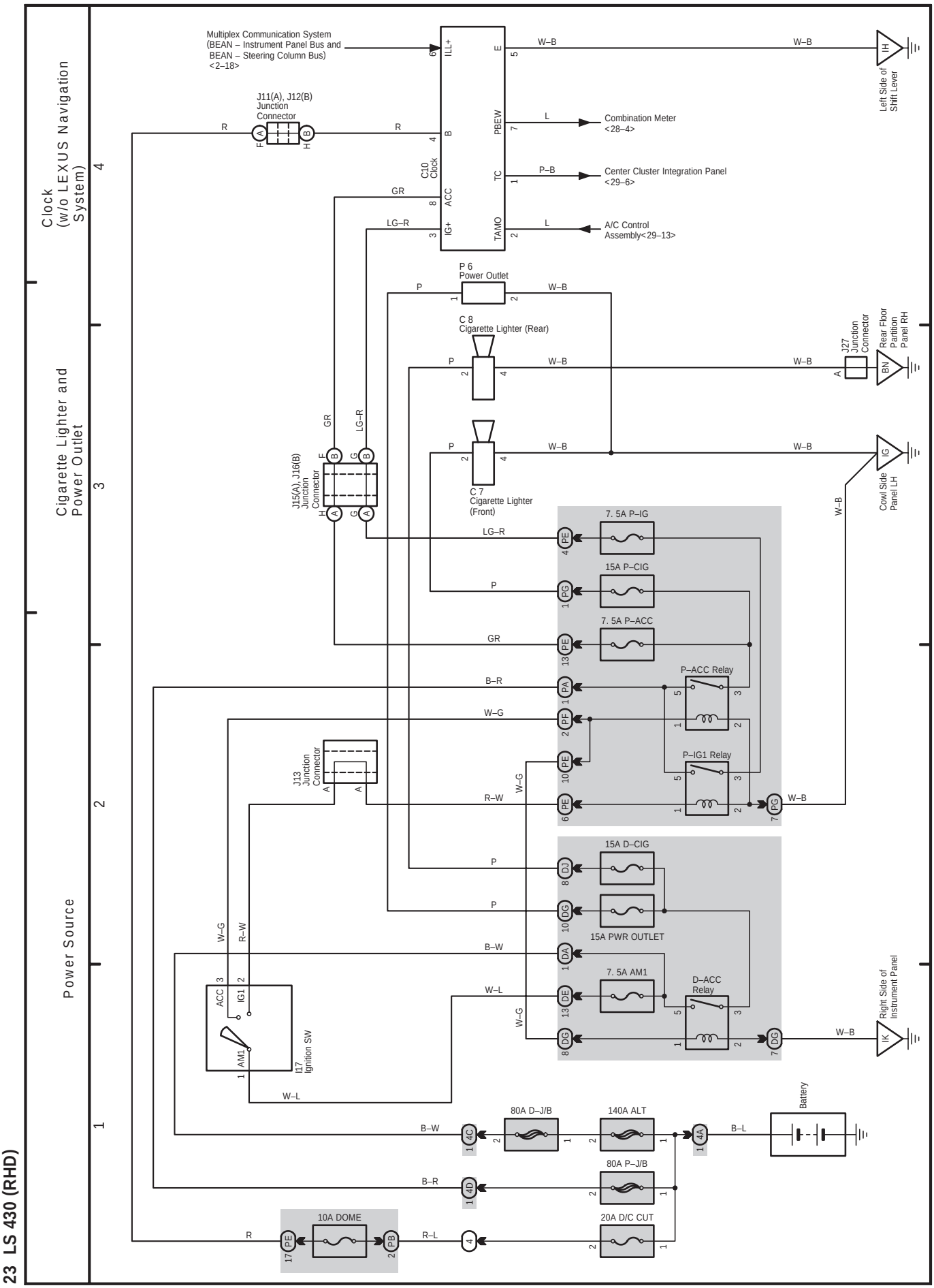
23 LS 430 (RHD)
Clock (w/o LEXUS Navigation System)
Cigarette Lighter and Power Outlet
Power Source
Multiplex Communication System (BEAN – Instrument Panel Bus and BEAN – Steering Column Bus) <2–18>
C10 Clock
ILL+
B
ACC
IG+
E
PBEW
TC
TAMO
Combination Meter <28–4>
Center Cluster Integration Panel <29–6>
A/C Control Assembly<29–13>
Left Side of Shift Lever
J11(A), J12(B) Junction Connector
P 6 Power Outlet
C 8 Cigarette Lighter (Rear)
C 7 Cigarette Lighter (Front)
J15(A), J16(B) Junction Connector
J27 Junction Connector
Rear Floor Partition Panel RH
Cowl Side Panel LH
7. 5A P–IG
15A P–CIG
7. 5A P–ACC
P–ACC Relay
P–IG1 Relay
J13 Junction Connector
15A D–CIG
15A PWR OUTLET
7. 5A AM1
D–ACC Relay
Right Side of Instrument Panel
I17 Ignition SW
ACC
IG1
AM1
80A D–J/B
140A ALT
Battery
80A P–J/B
10A DOME
20A D/C CUT