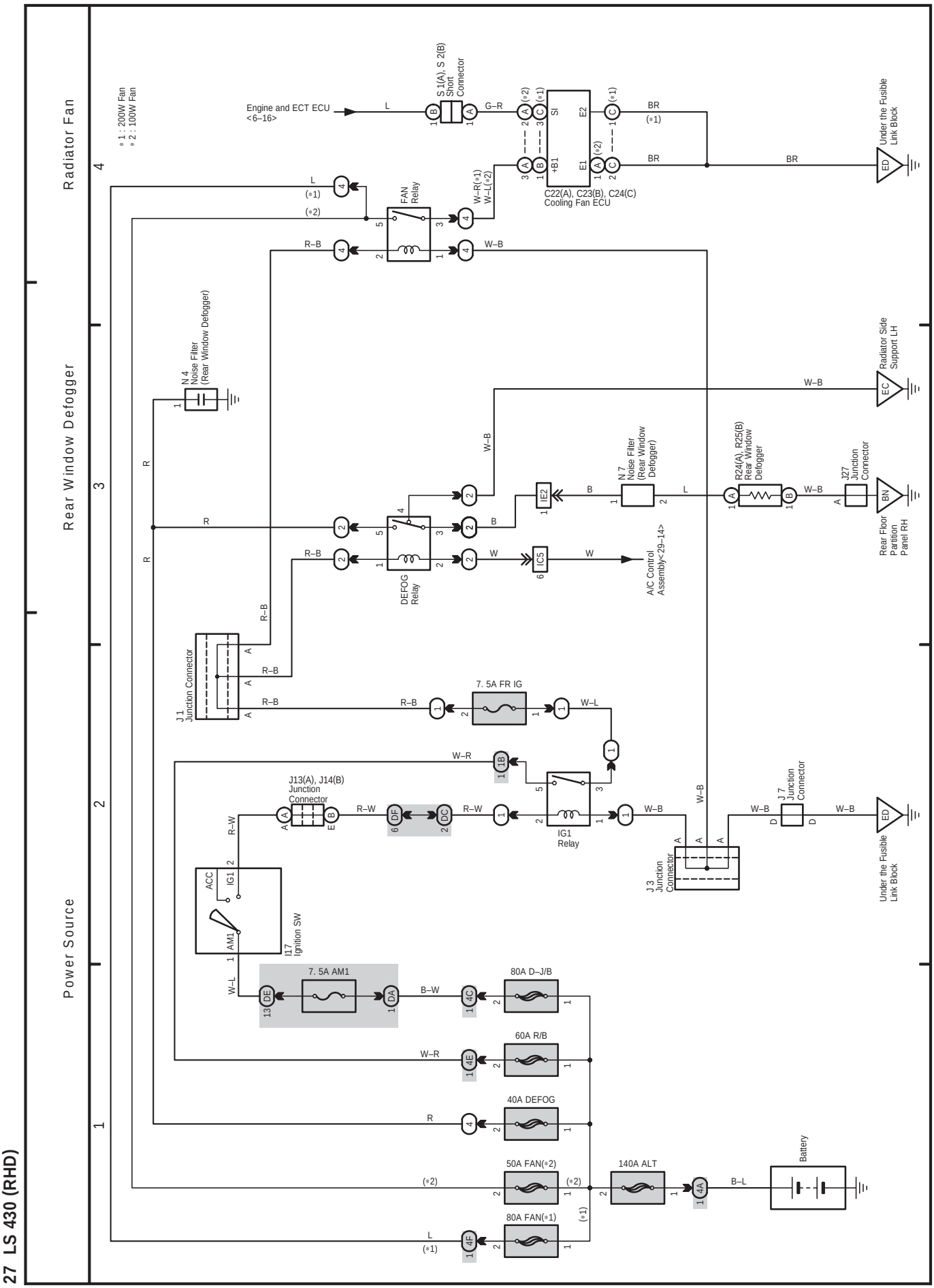
27 LS 430 (RHD)
Radiator Fan
Rear Window Defogger
Power Source
*1 : 200W Fan
*2 : 100W Fan
Engine and ECT ECU
<6–16>
S 1(A), S 2(B)
Short
Connector
C22(A), C23(B), C24(C)
Cooling Fan ECU
Under the Fusible
Link Block
FAN
Relay
N 4
Noise Filter
(Rear Window Defogger)
Radiator Side
Support LH
N 7
Noise Filter
(Rear Window
Defogger)
R24(A), R25(B)
Rear Window
Defogger
J27
Junction
Connector
Rear Floor
Partition
Panel RH
DEFOG
Relay
A/C Control
Assembly<29–14>
J1
Junction Connector
7. 5A FR IG
J13(A), J14(B)
Junction
Connector
IG1
Relay
J 7
Junction
Connector
J 3
Junction
Connector
ACC
IG1
AM1
I17
Ignition SW
7. 5A AM1
80A D–J/B
60A R/B
40A DEFOG
50A FAN(*2)
80A FAN(*1)
140A ALT
Battery