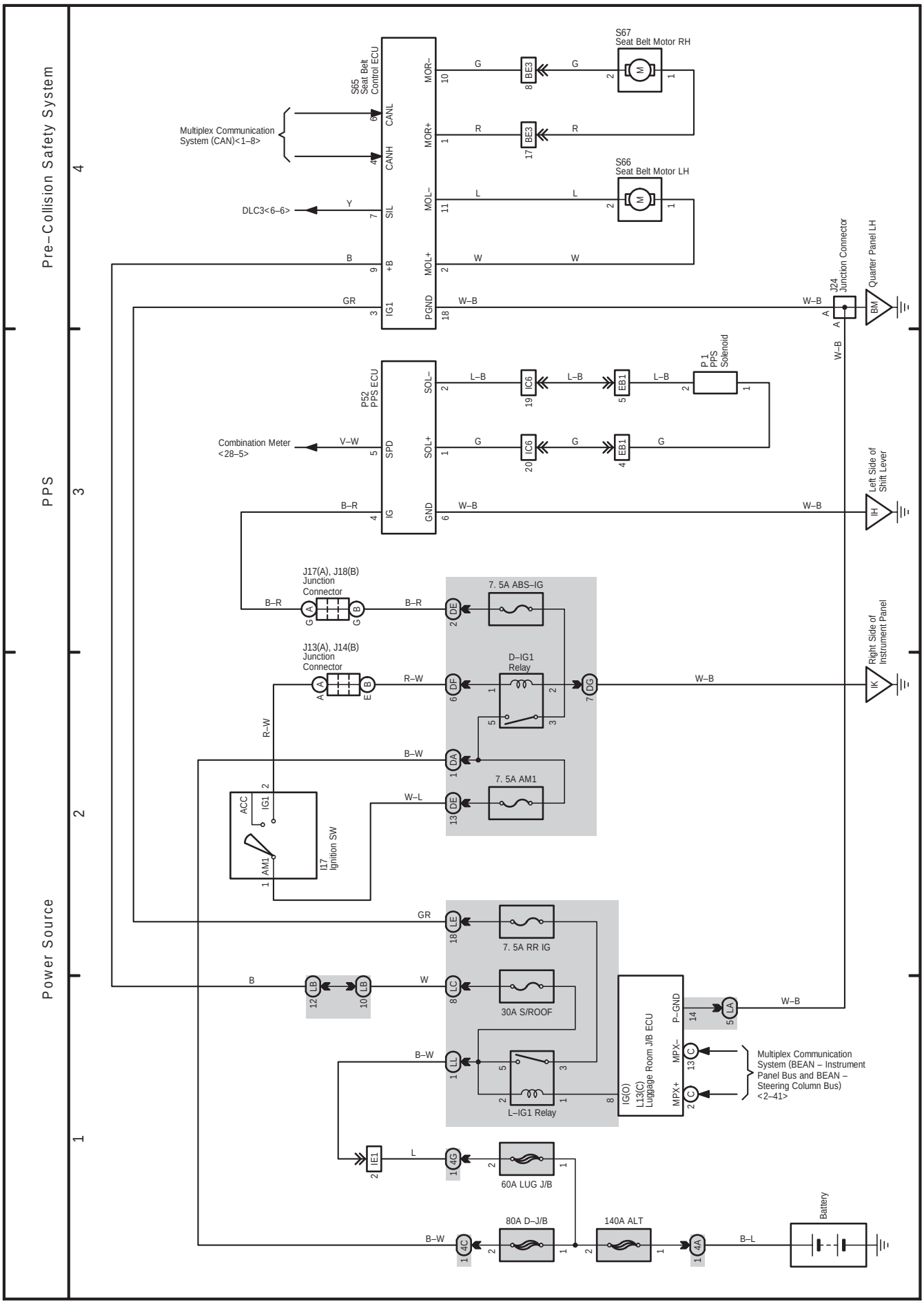
Pre–Collision Safety System
PPS
Power Source
S65 Seat Belt Control ECU
Multiplex Communication System (CAN)<1–8>
DLC3<6–6>
S67 Seat Belt Motor RH
S66 Seat Belt Motor LH
J24 Junction Connector
Quarter Panel LH
P52 PPS ECU
Combination Meter <28–5>
P.1 PPS Solenoid
Left Side of Shift Lever
J17(A), J18(B) Junction Connector
J13(A), J14(B) Junction Connector
7. 5A ABS–IG
D–IG1 Relay
7. 5A AM1
I17 Ignition SW
Right Side of Instrument Panel
7. 5A RR IG
30A S/ROOF
L–IG1 Relay
IG(O) L13(C) Luggage Room J/B ECU
Multiplex Communication System (BEAN – Instrument Panel Bus and BEAN – Steering Column Bus) <2–41>
60A LUG J/B
80A D–J/B
140A ALT
Battery

31 LS 430 (RHD)