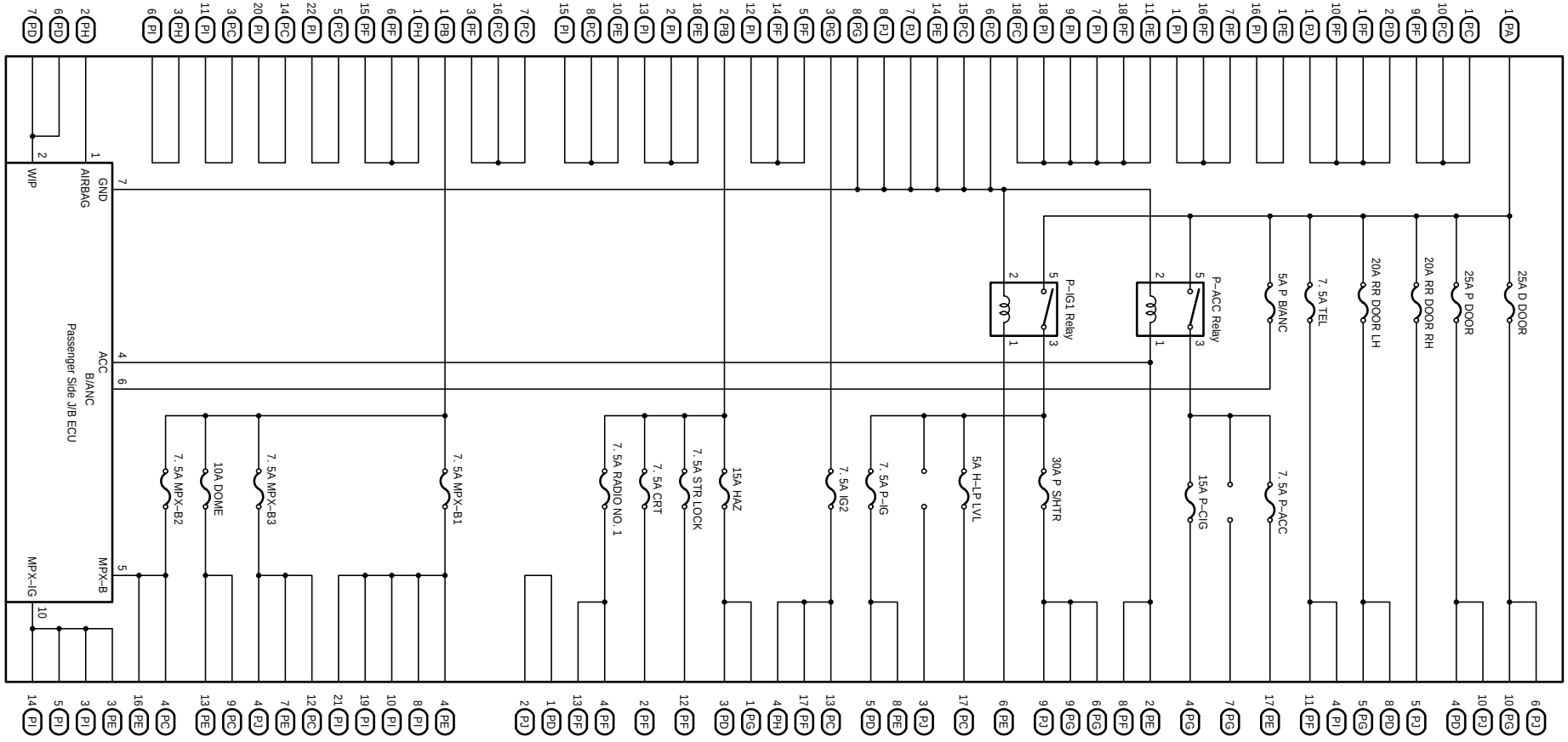Passenger Side J/B Inner Circuit (LHD)