05I3B–01

LOCATION

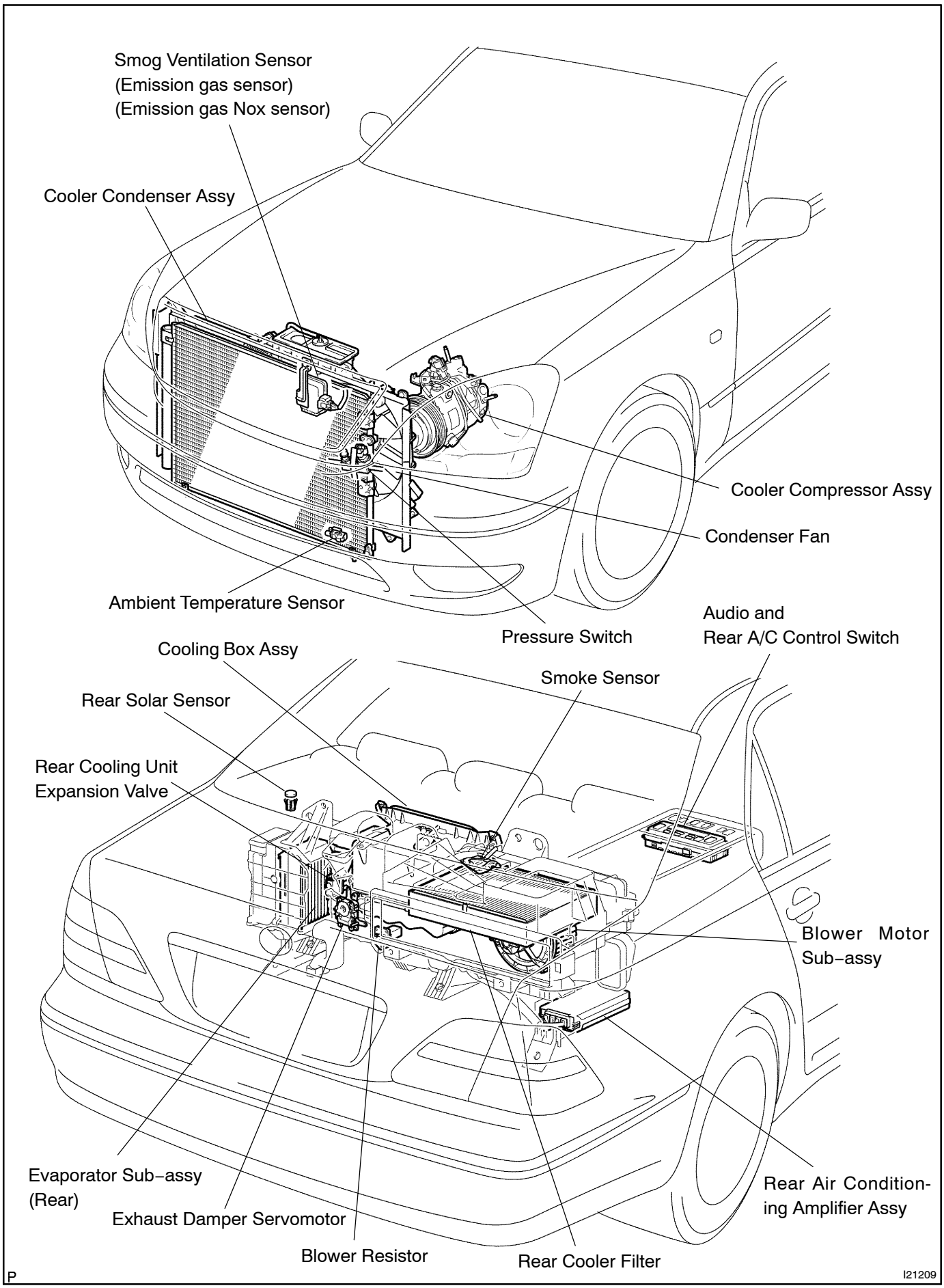

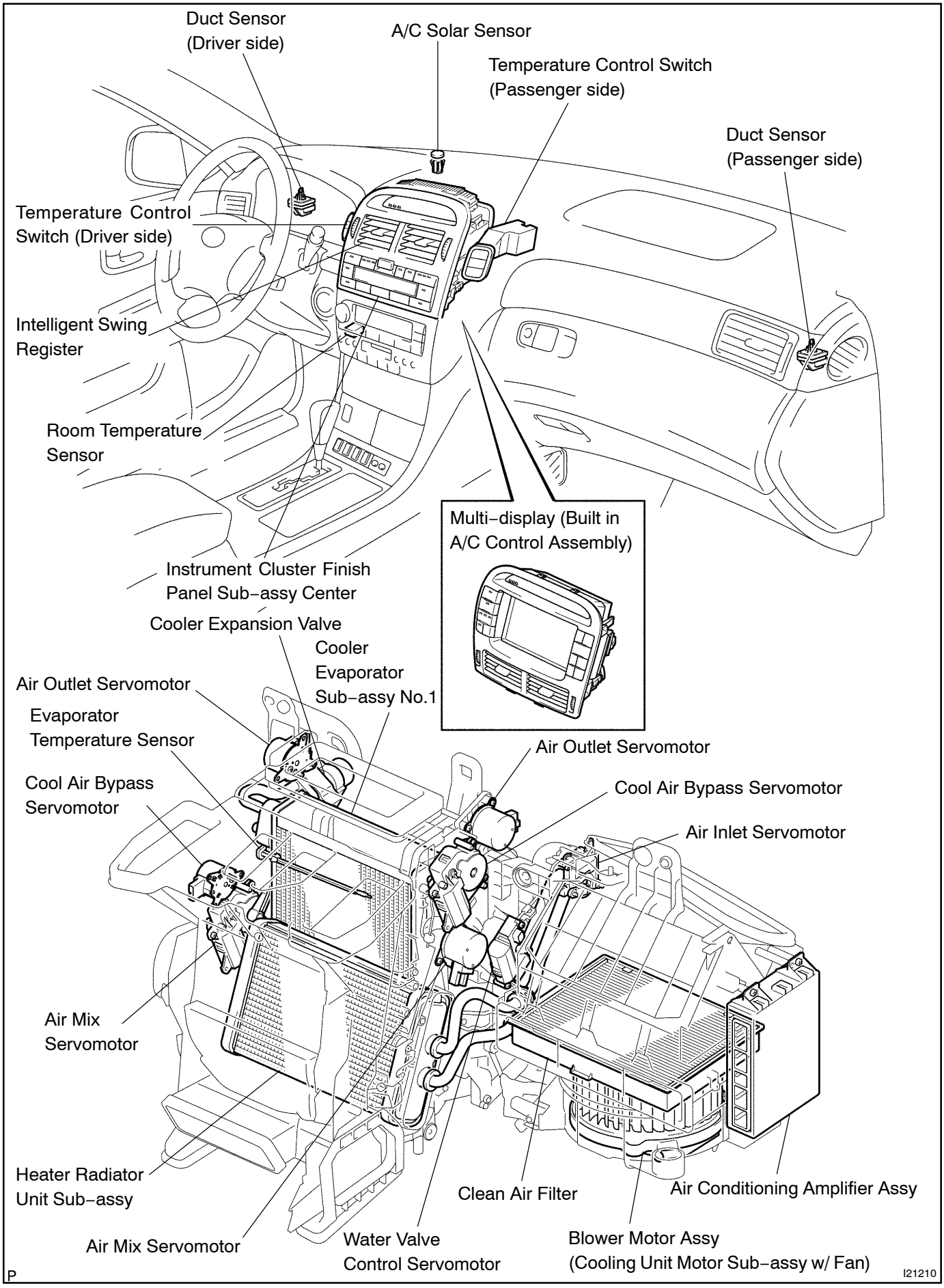
Duct Sensor
(Driver side)
A/C Solar Sensor
Temperature Control Switch
(Passenger side)
Duct Sensor
(Passenger side)
Temperature Control
Switch (Driver side)
Intelligent Swing
Register
Room Temperature
Sensor
Multi–display (Built in
A/C Control Assembly)
Instrument Cluster Finish
Panel Sub–assy Center
Cooler Expansion Valve
Cooler
Evaporator
Sub–assy No.1
Air Outlet Servomotor
Evaporator
Temperature Sensor
Cool Air Bypass
Servomotor
Air Outlet Servomotor
Cool Air Bypass Servomotor
Air Inlet Servomotor
Air Mix
Servomotor
Heater Radiator
Unit Sub–assy
Air Mix Servomotor
Water Valve
Control Servomotor
Clean Air Filter
Blower Motor Assy
(Cooling Unit Motor Sub–assy w/ Fan)
Air Conditioning Amplifier Assy
P
I21210