05H0N–01

LOCATION

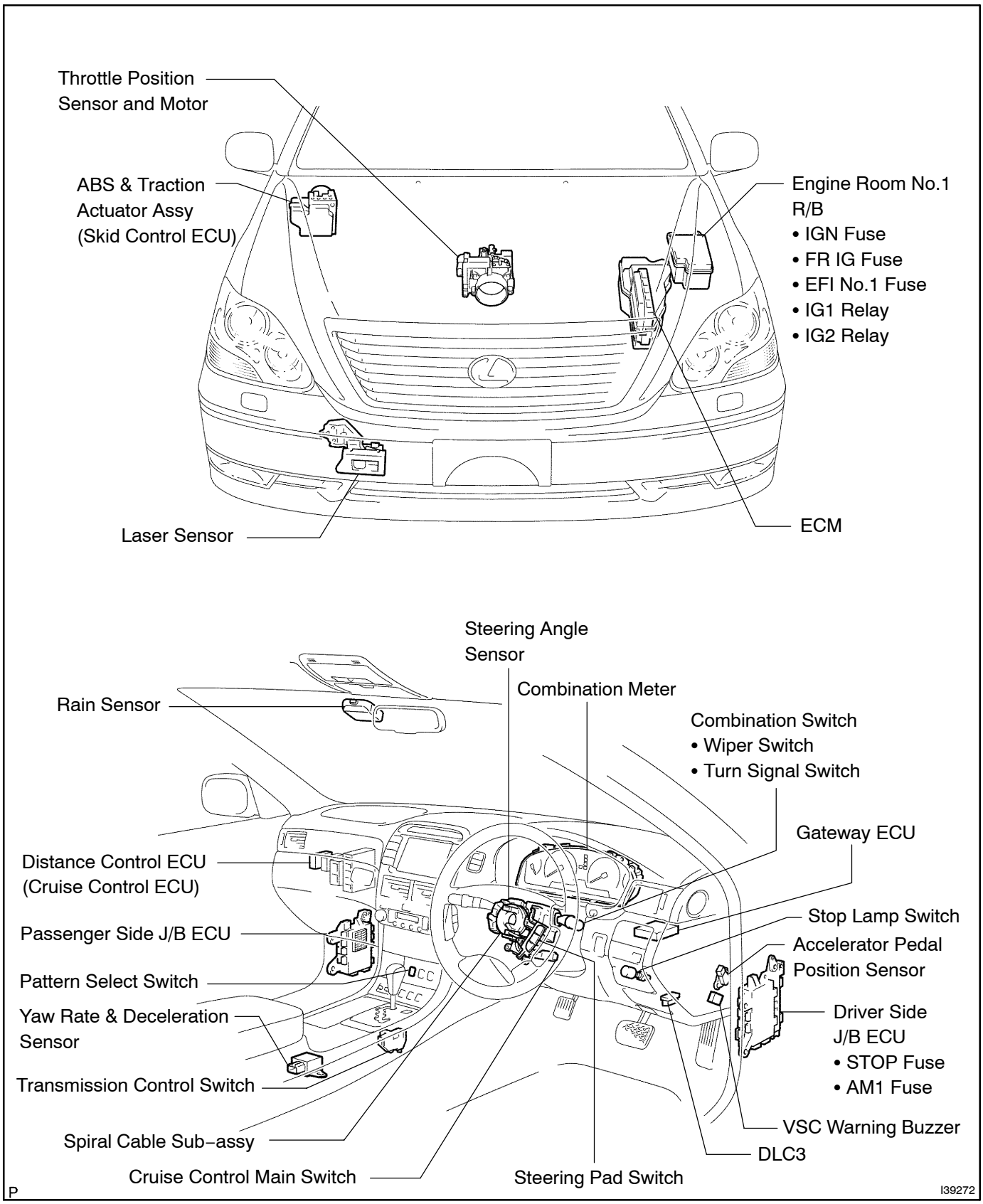

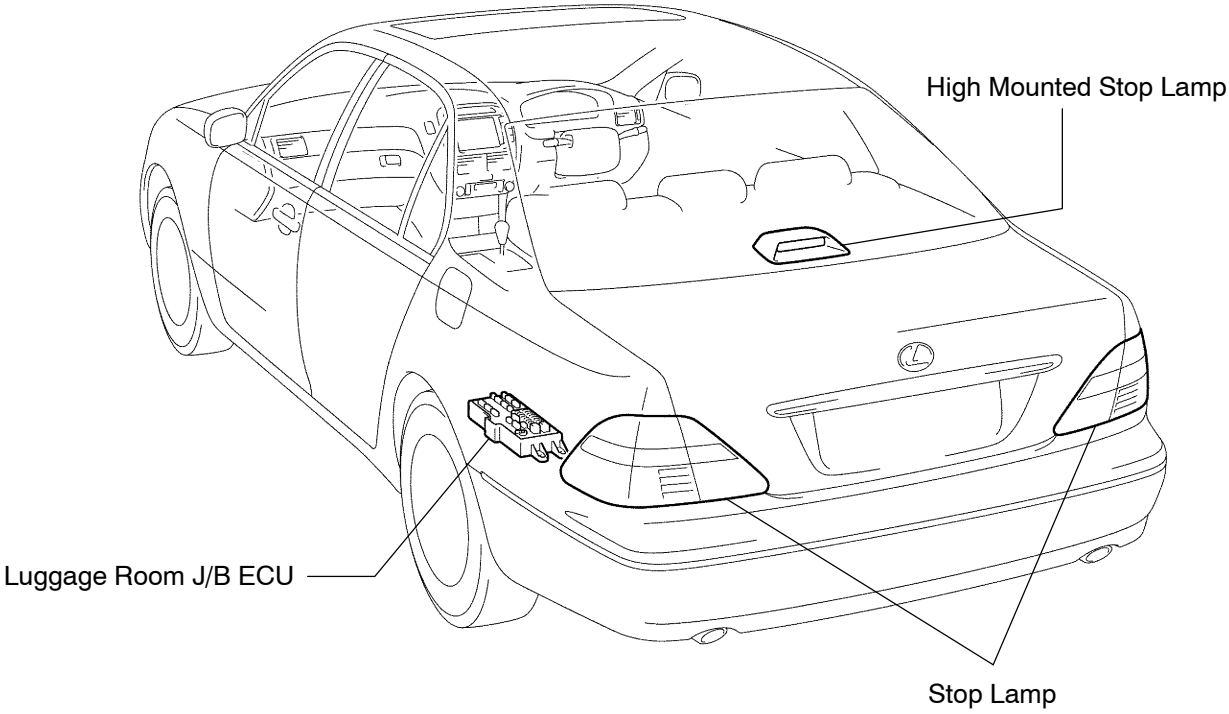
High Mounted Stop Lamp
Luggage Room J/B ECU
Stop Lamp

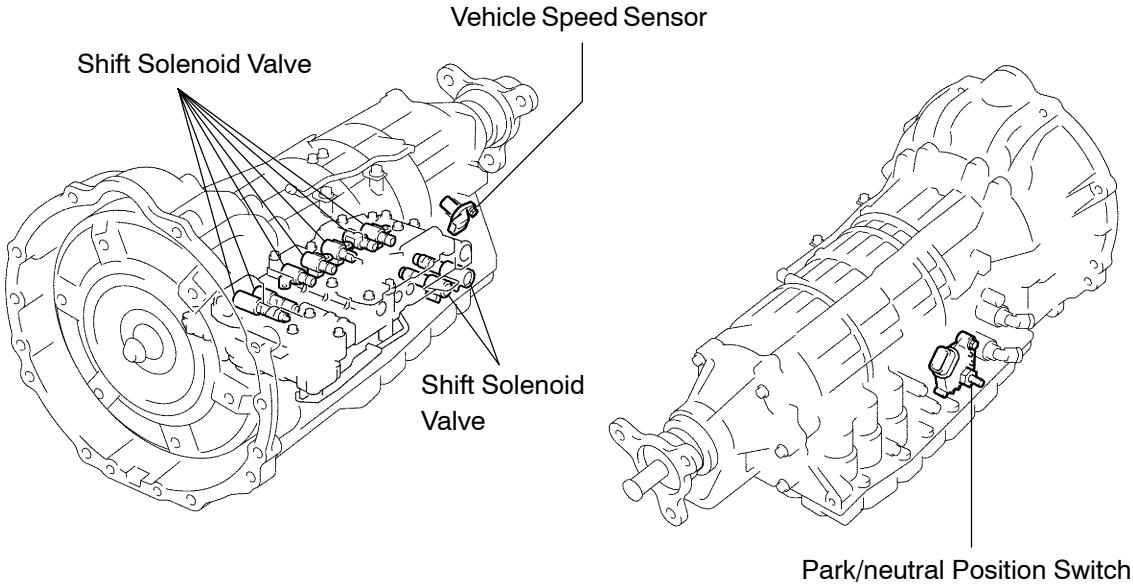
Vehicle Speed Sensor
Shift Solenoid Valve
Shift Solenoid Valve
Park/neutral Position Switch

P

I39305