FUEL INJECTOR ASSY

1110T–01

COMPONENTS

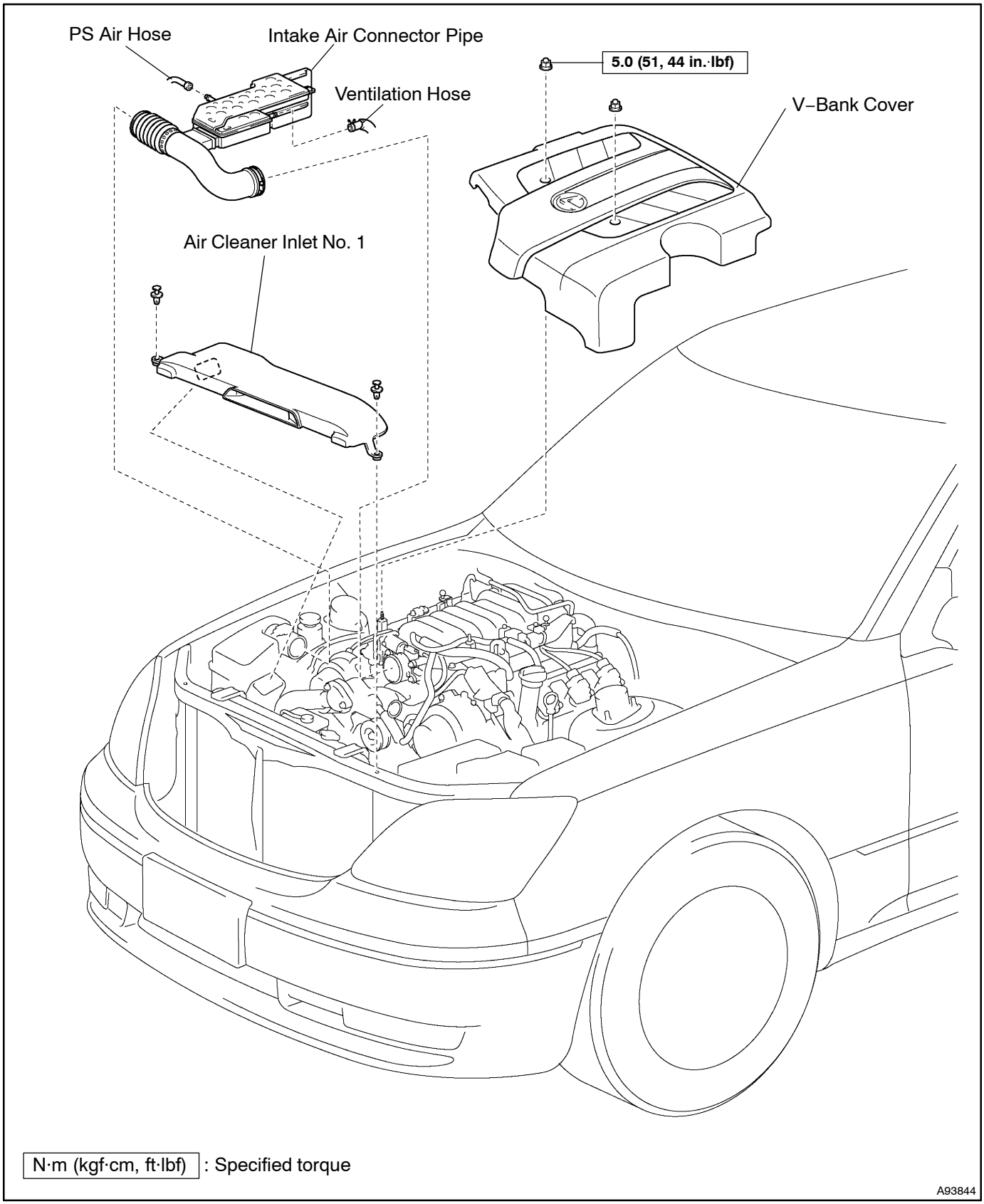

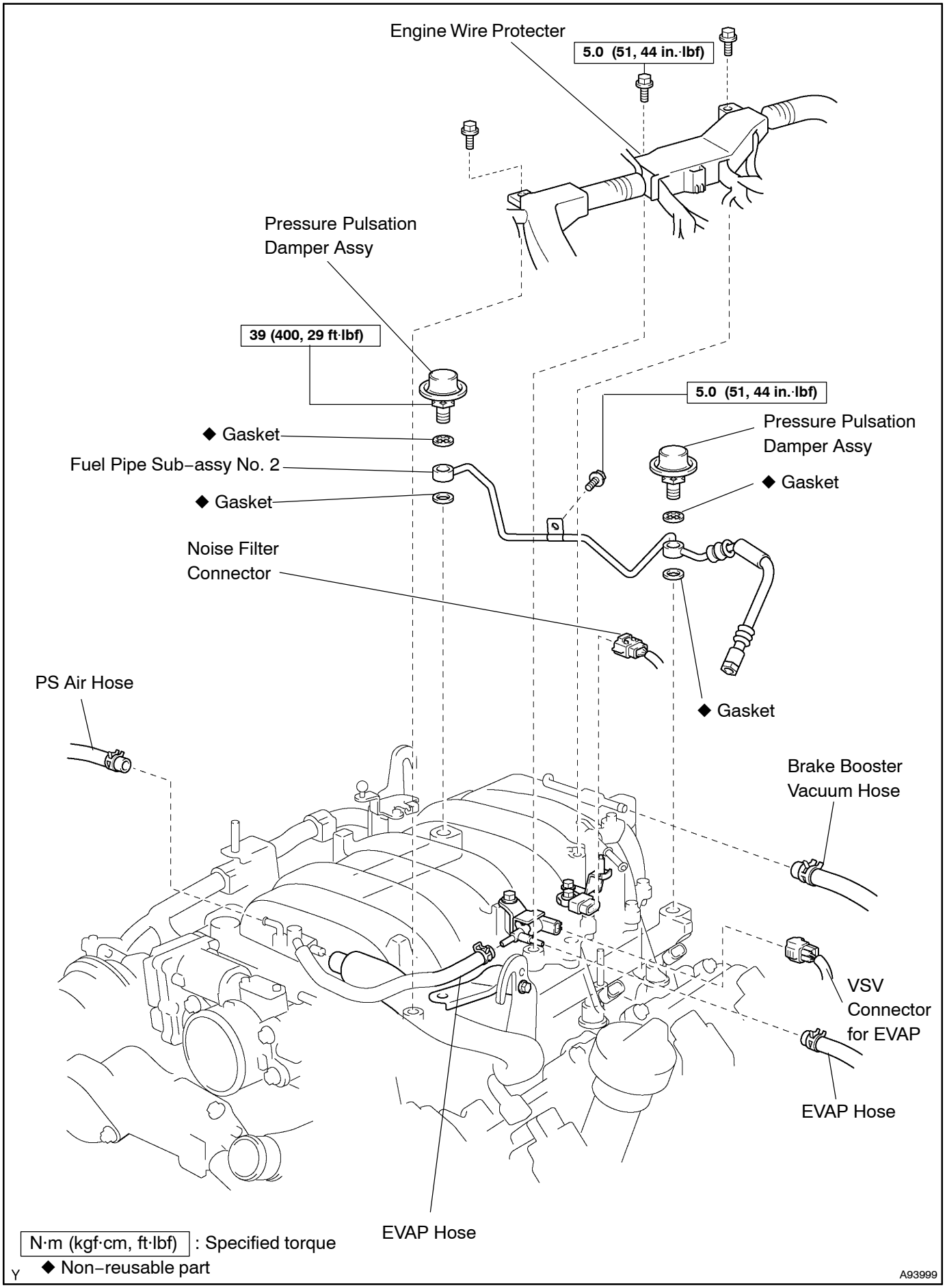
Engine Wire Protecter
5.0 (51, 44 in.·lbf)
Pressure Pulsation Damper Assy
39 (400, 29 ft·lbf)
5.0 (51, 44 in.·lbf)
Pressure Pulsation Damper Assy
◆ Gasket
Fuel Pipe Sub–assy No. 2
◆ Gasket
◆ Gasket
Noise Filter Connector
PS Air Hose
◆ Gasket
Brake Booster Vacuum Hose
VSV Connector for EVAP
EVAP Hose
EVAP Hose
N·m (kgf·cm, ft·lbf) : Specified torque
◆ Non–reusable part
Y
A93999

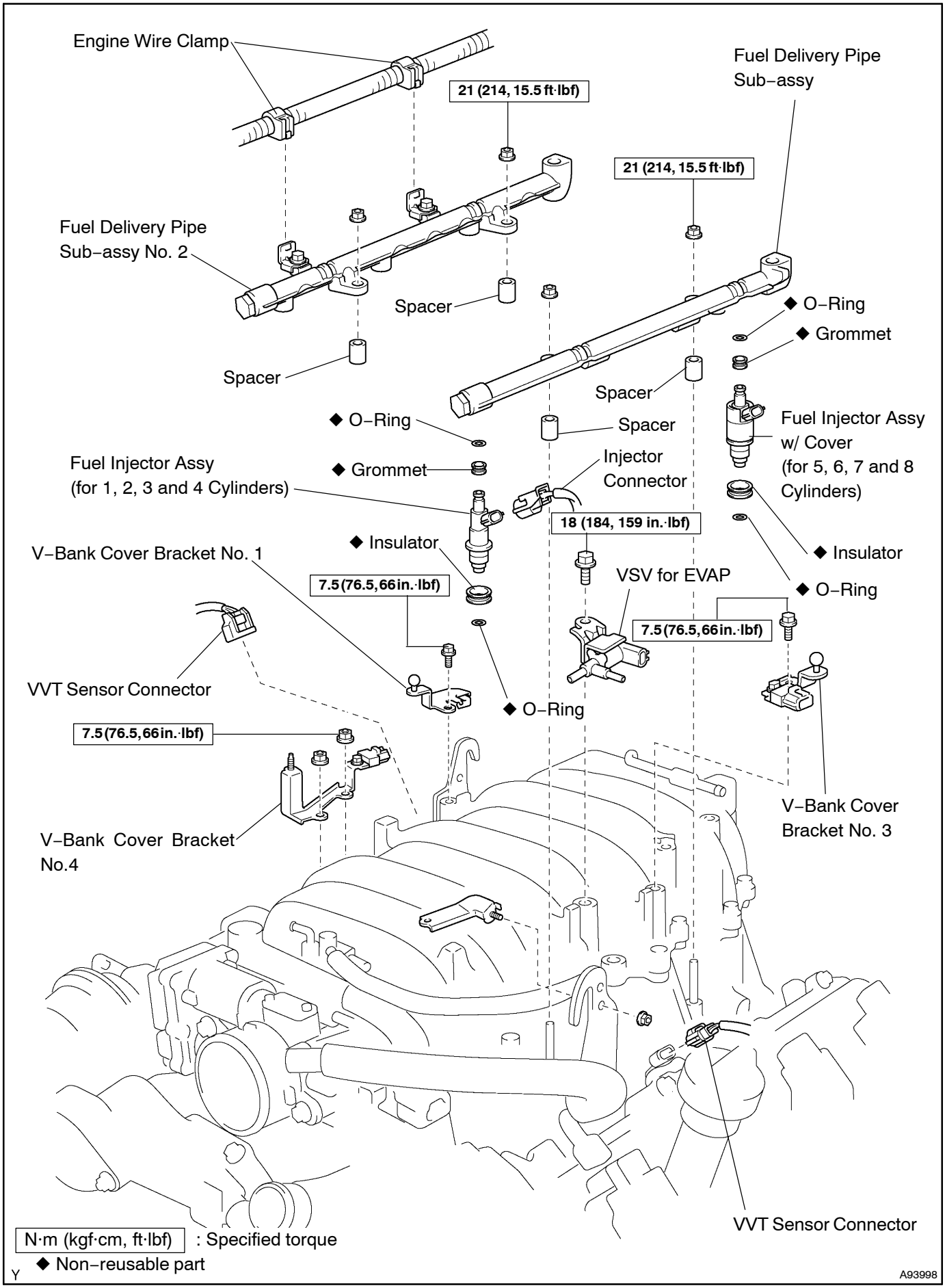
Engine Wire Clamp
21 (214, 15.5 ft·lbf)
Fuel Delivery Pipe Sub–assy
21 (214, 15.5 ft·lbf)
Fuel Delivery Pipe Sub–assy No. 2
Spacer
◆ O–Ring
◆ Grommet
Spacer
Spacer
◆ O–Ring
Spacer
Fuel Injector Assy w/ Cover (for 5, 6, 7 and 8 Cylinders)
Fuel Injector Assy (for 1, 2, 3 and 4 Cylinders)
◆ Grommet
Injector Connector
18 (184, 159 in.·lbf)
◆ Insulator
V–Bank Cover Bracket No. 1
7.5 (76.5, 66 in.·lbf)
VSV for EVAP
◆ Insulator
◆ O–Ring
7.5 (76.5, 66 in.·lbf)
VVT Sensor Connector
◆ O–Ring
7.5 (76.5, 66 in.·lbf)
V–Bank Cover Bracket No. 3
V–Bank Cover Bracket No.4
VVT Sensor Connector
N·m (kgf·cm, ft·lbf) : Specified torque
◆ Non–reusable part
Y
A93998