160SL–01
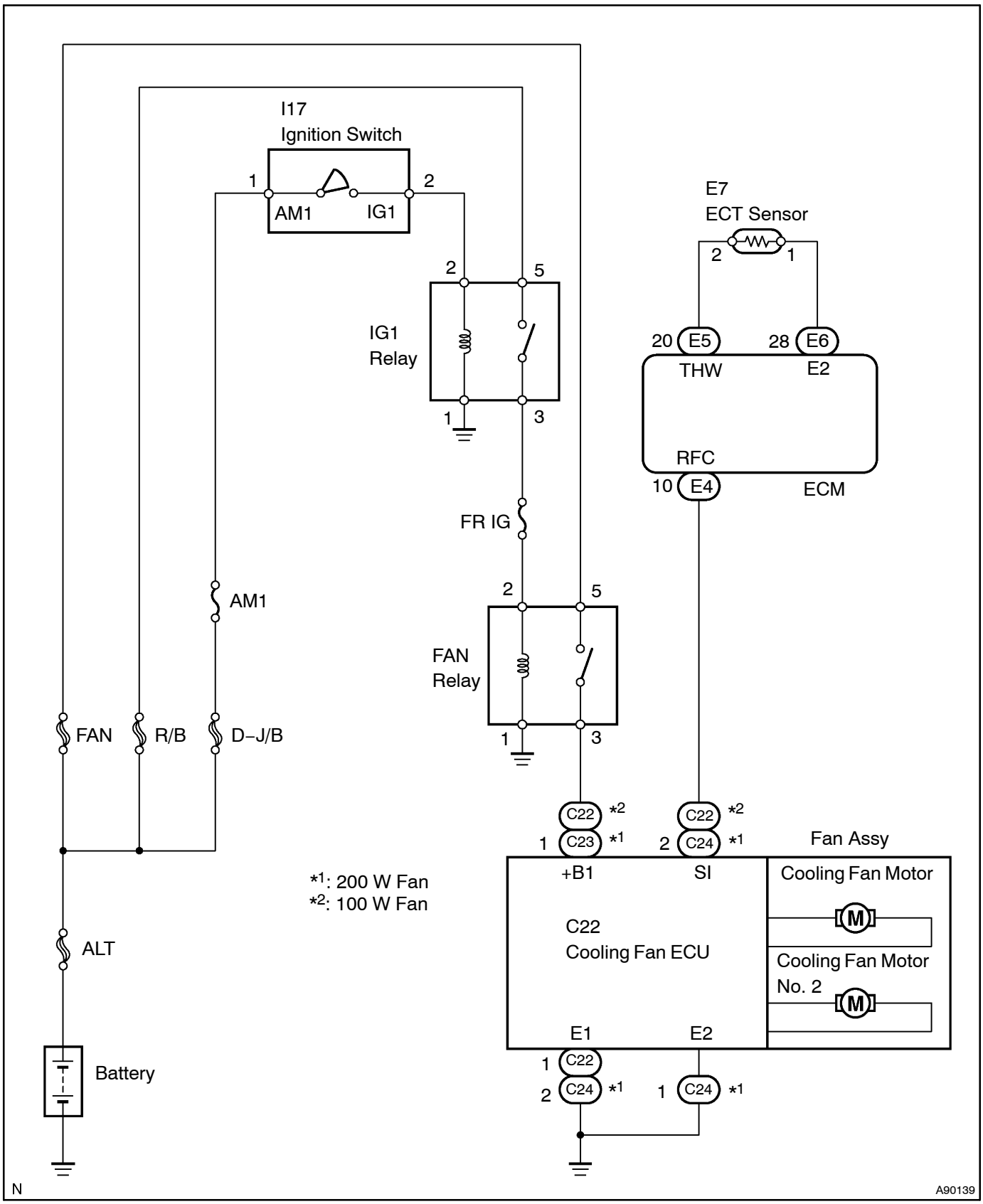
SYSTEM DIAGRAM