160SV–01

COMPONENTS

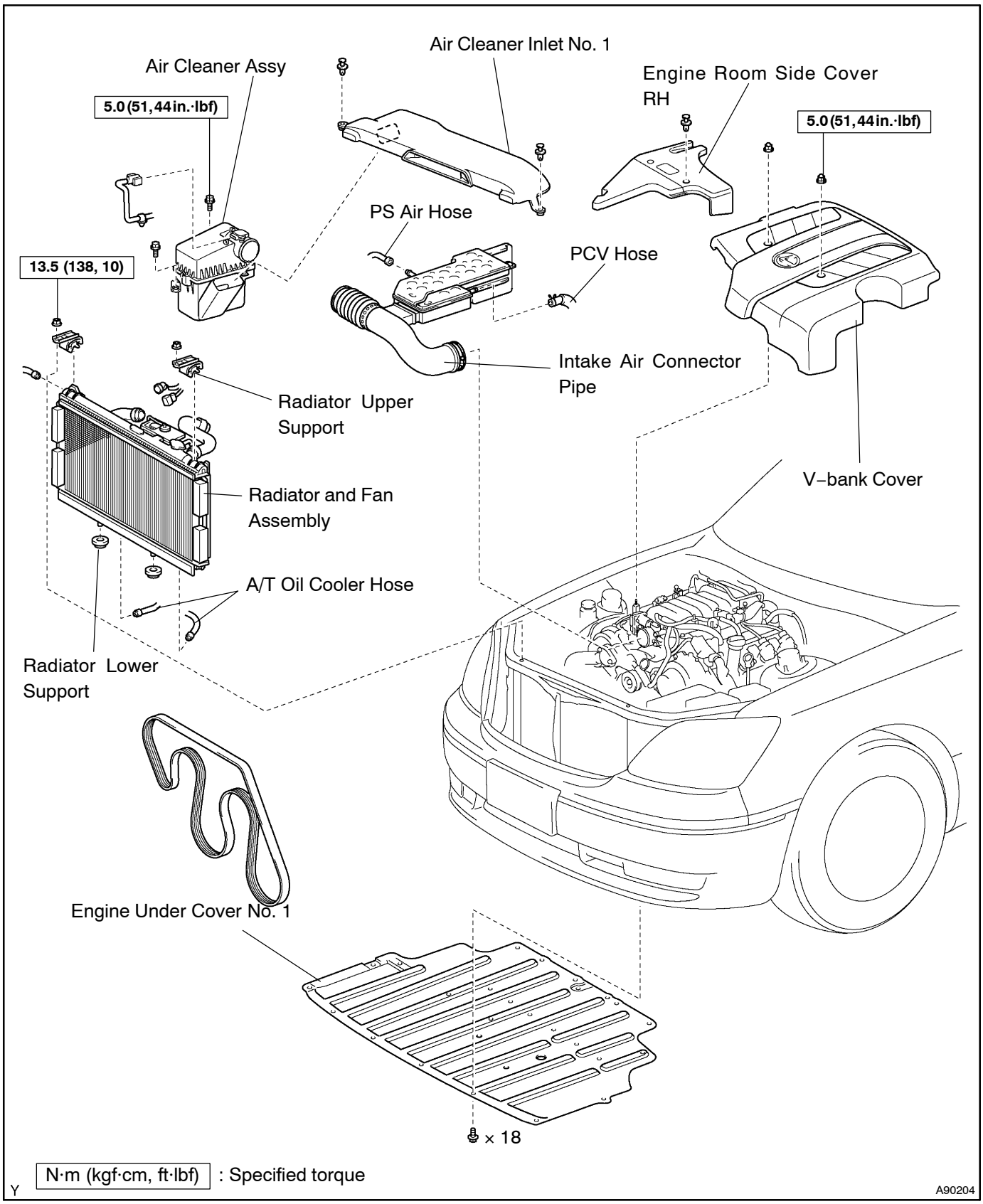

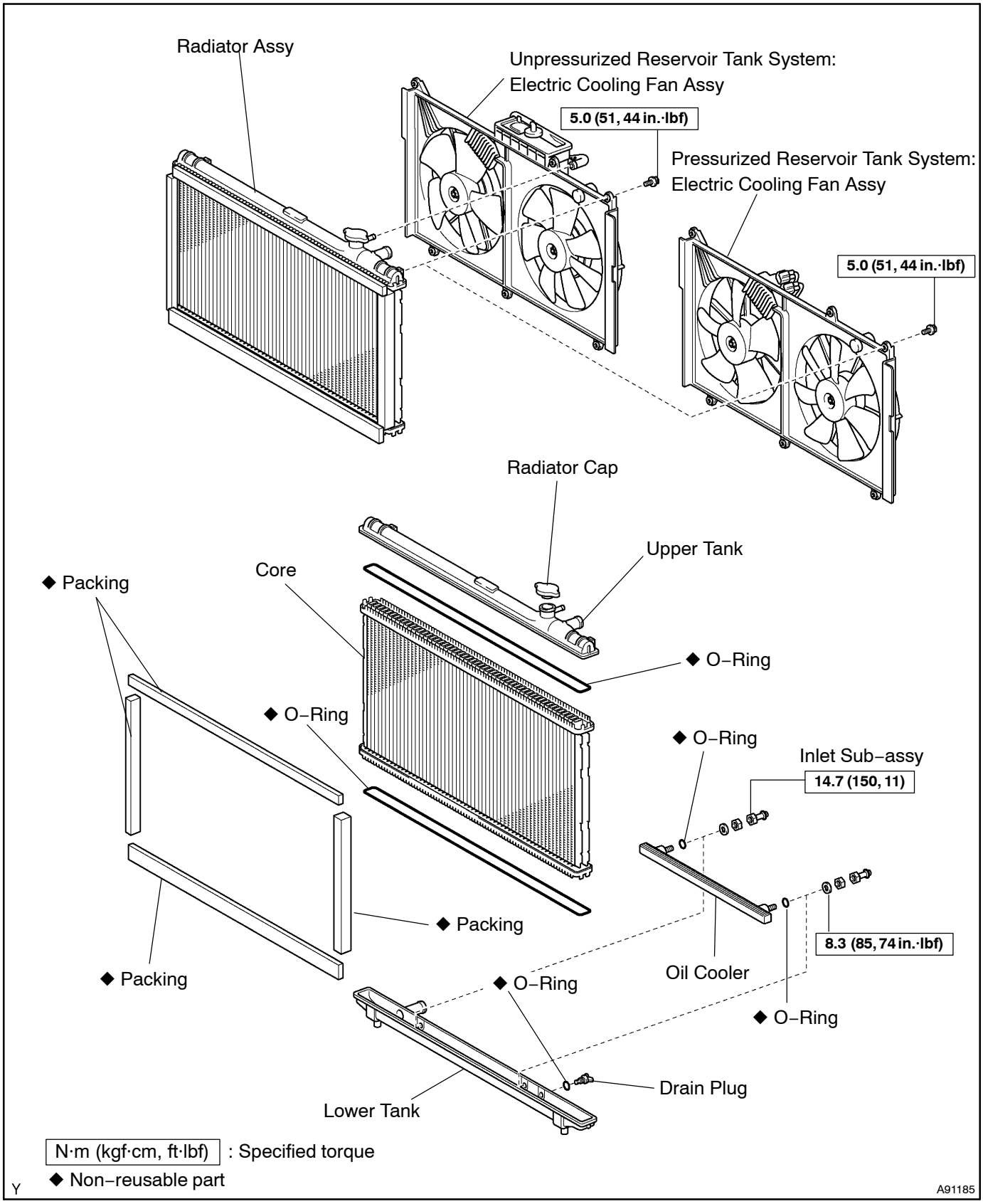
Radiator Assy
Unpressurized Reservoir Tank System:
Electric Cooling Fan Assy
5.0 (51, 44 in.·lbf)
Pressurized Reservoir Tank System:
Electric Cooling Fan Assy
5.0 (51, 44 in.·lbf)
Radiator Cap
Upper Tank
Core
◆ Packing
◆ O–Ring
◆ O–Ring
◆ O–Ring
Inlet Sub–assy
14.7 (150, 11)
◆ Packing
◆ Packing
8.3 (85, 74 in.·lbf)
Oil Cooler
◆ O–Ring
◆ O–Ring
Drain Plug
Lower Tank
N·m (kgf·cm, ft·lbf) : Specified torque
◆ Non–reusable part
Y
A91185