300NK–01

COMPONENTS

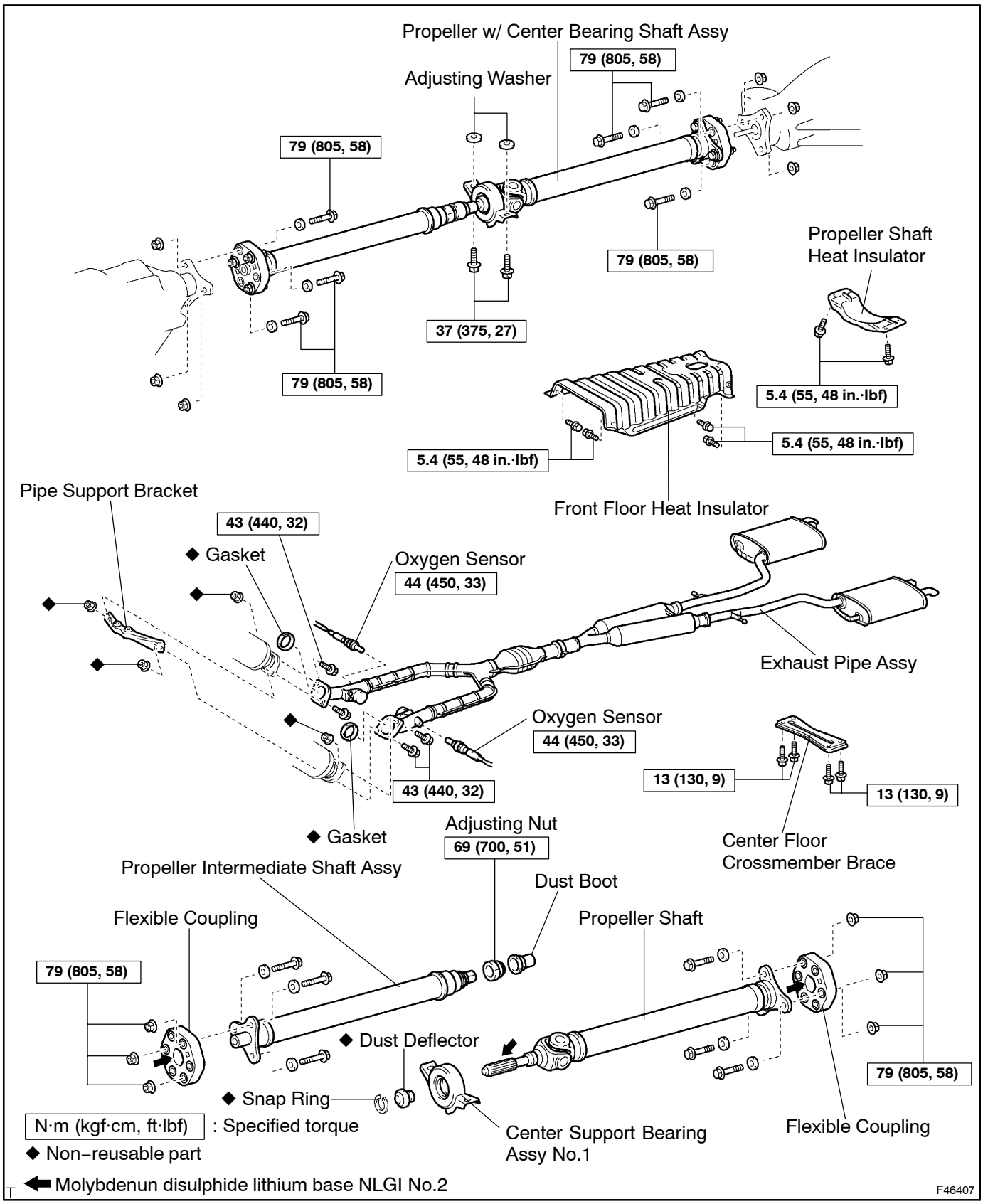

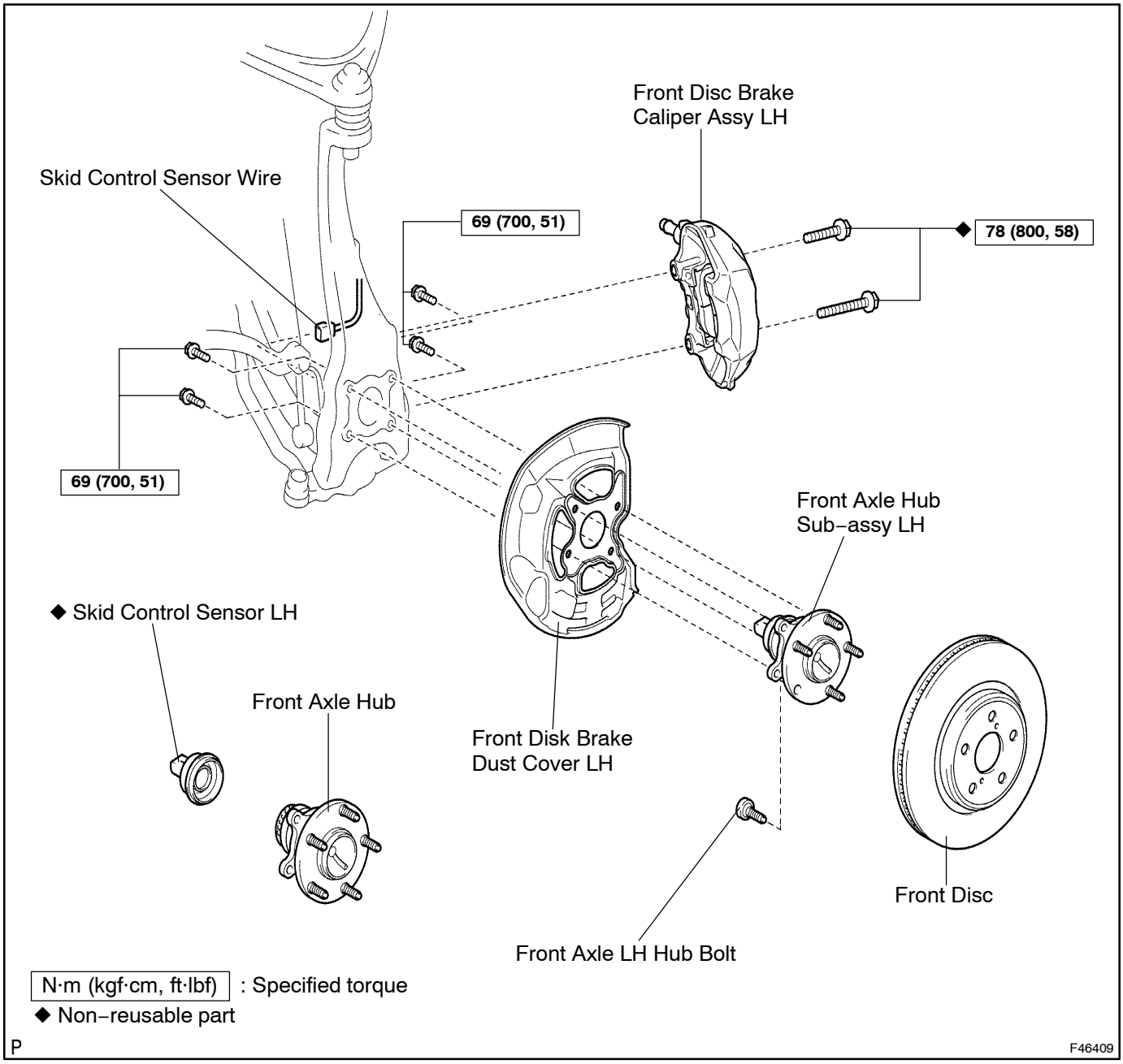
Front Disc Brake
Caliper Assy LH
Skid Control Sensor Wire
69 (700, 51)
◆ 78 (800, 58)
69 (700, 51)
Front Axle Hub
Sub–assy LH
◆ Skid Control Sensor LH
Front Axle Hub
Front Disk Brake
Dust Cover LH
Front Disc
Front Axle LH Hub Bolt
N·m (kgf·cm, ft·lbf) : Specified torque
◆ Non–reusable part
P
F46409

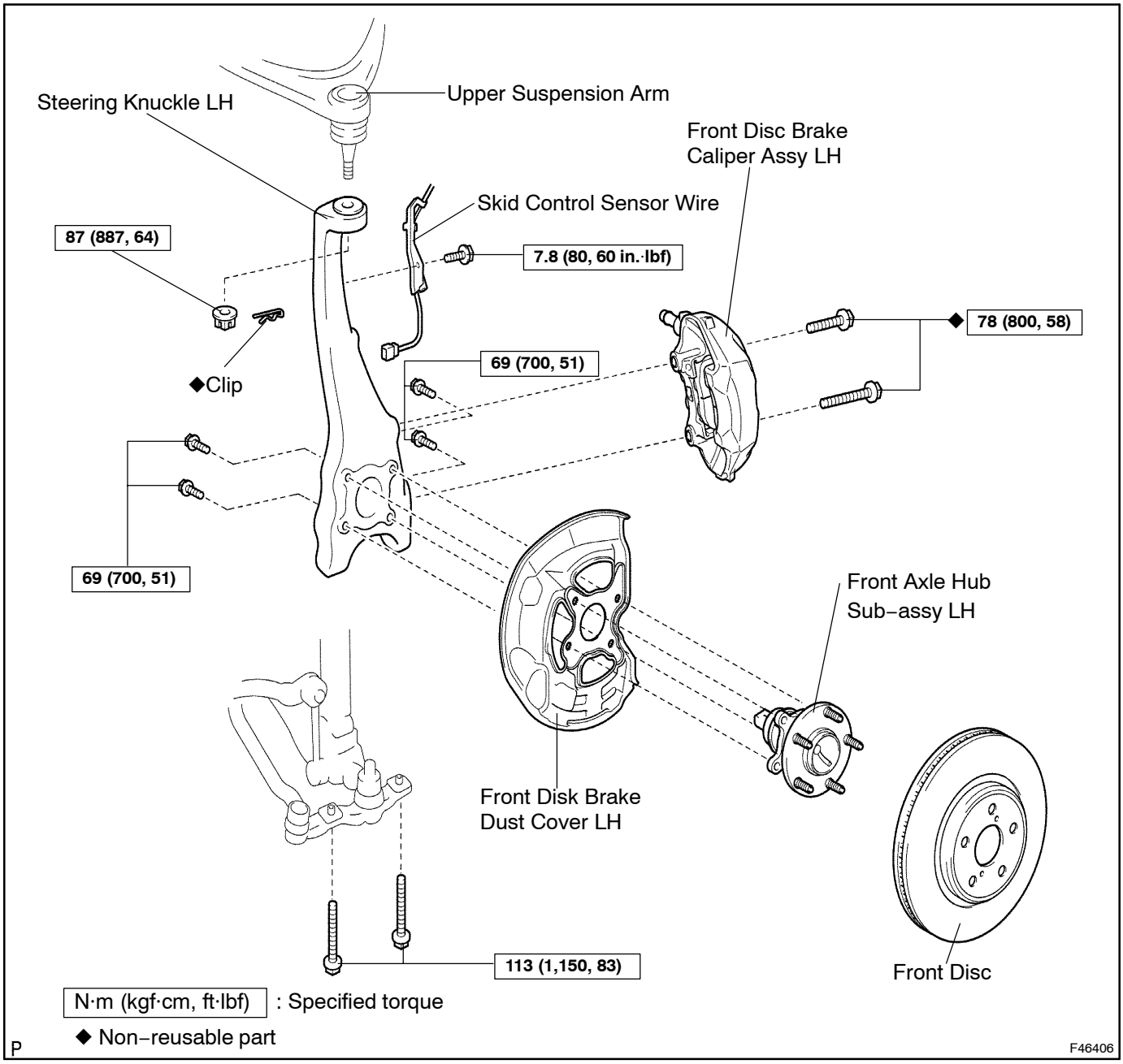
Steering Knuckle LH
Upper Suspension Arm
Front Disc Brake
Caliper Assy LH
Skid Control Sensor Wire
87 (887, 64)
7.8 (80, 60 in.·lbf)
◆ 78 (800, 58)
69 (700, 51)
◆Clip
69 (700, 51)
Front Axle Hub
Sub–assy LH
Front Disk Brake
Dust Cover LH
113 (1,150, 83)
Front Disc
N·m (kgf·cm, ft·lbf) : Specified torque
◆ Non–reusable part
P
F46406

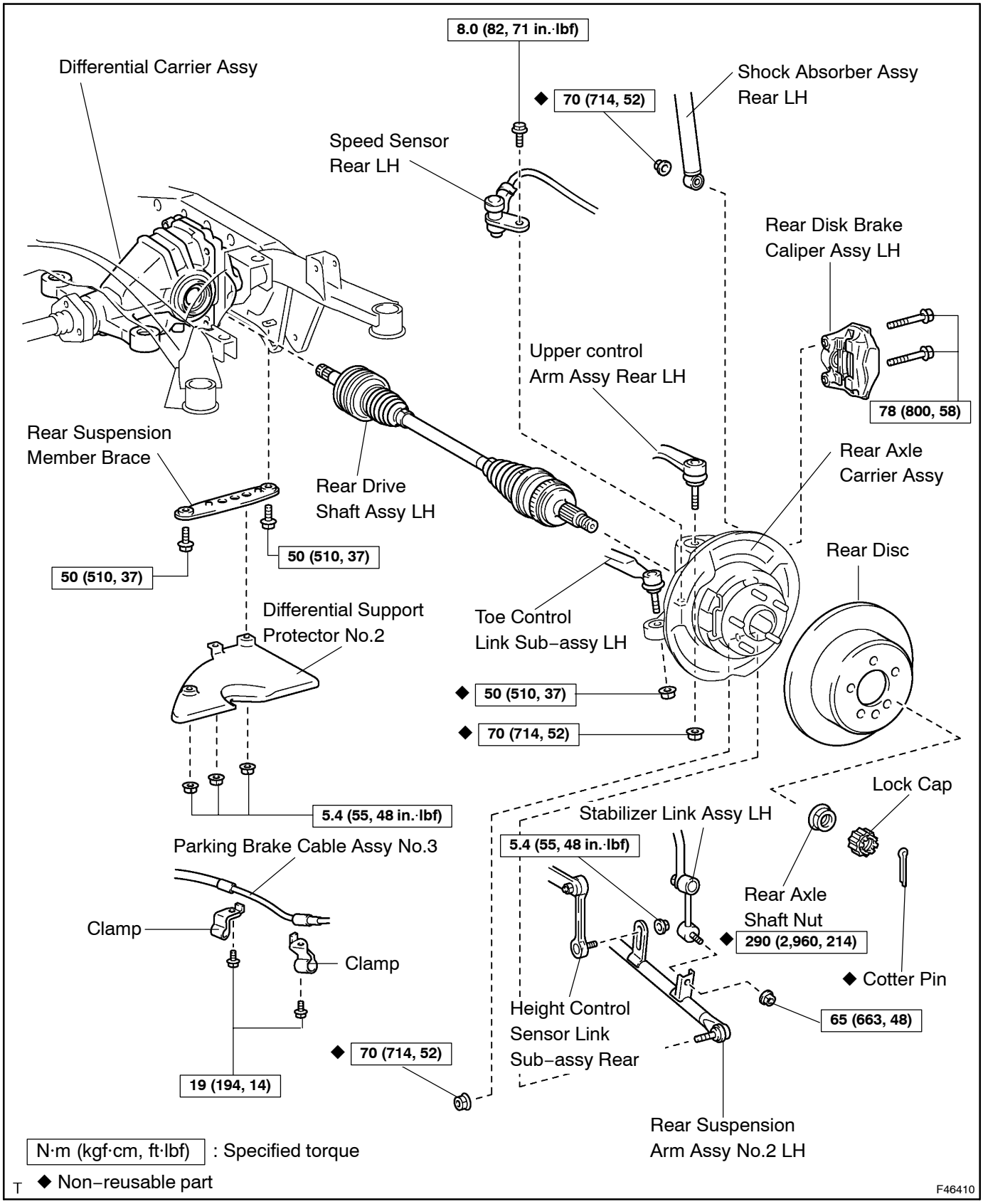
8.0 (82, 71 in.·lbf)
Differential Carrier Assy
Shock Absorber Assy Rear LH
◆ 70 (714, 52)
Speed Sensor Rear LH
Rear Disk Brake Caliper Assy LH
Upper control Arm Assy Rear LH
78 (800, 58)
Rear Suspension Member Brace
Rear Axle Carrier Assy
Rear Drive Shaft Assy LH
50 (510, 37)
50 (510, 37)
Rear Disc
Differential Support Protector No.2
Toe Control Link Sub–assy LH
◆ 50 (510, 37)
◆ 70 (714, 52)
Lock Cap
5.4 (55, 48 in.·lbf)
Stabilizer Link Assy LH
Parking Brake Cable Assy No.3
5.4 (55, 48 in.·lbf)
Rear Axle Shaft Nut
Clamp
◆ 290 (2,960, 214)
Clamp
◆ Cotter Pin
Height Control Sensor Link Sub–assy Rear
65 (663, 48)
◆ 70 (714, 52)
19 (194, 14)
Rear Suspension Arm Assy No.2 LH
N·m (kgf·cm, ft·lbf) : Specified torque
◆ Non–reusable part
F46410

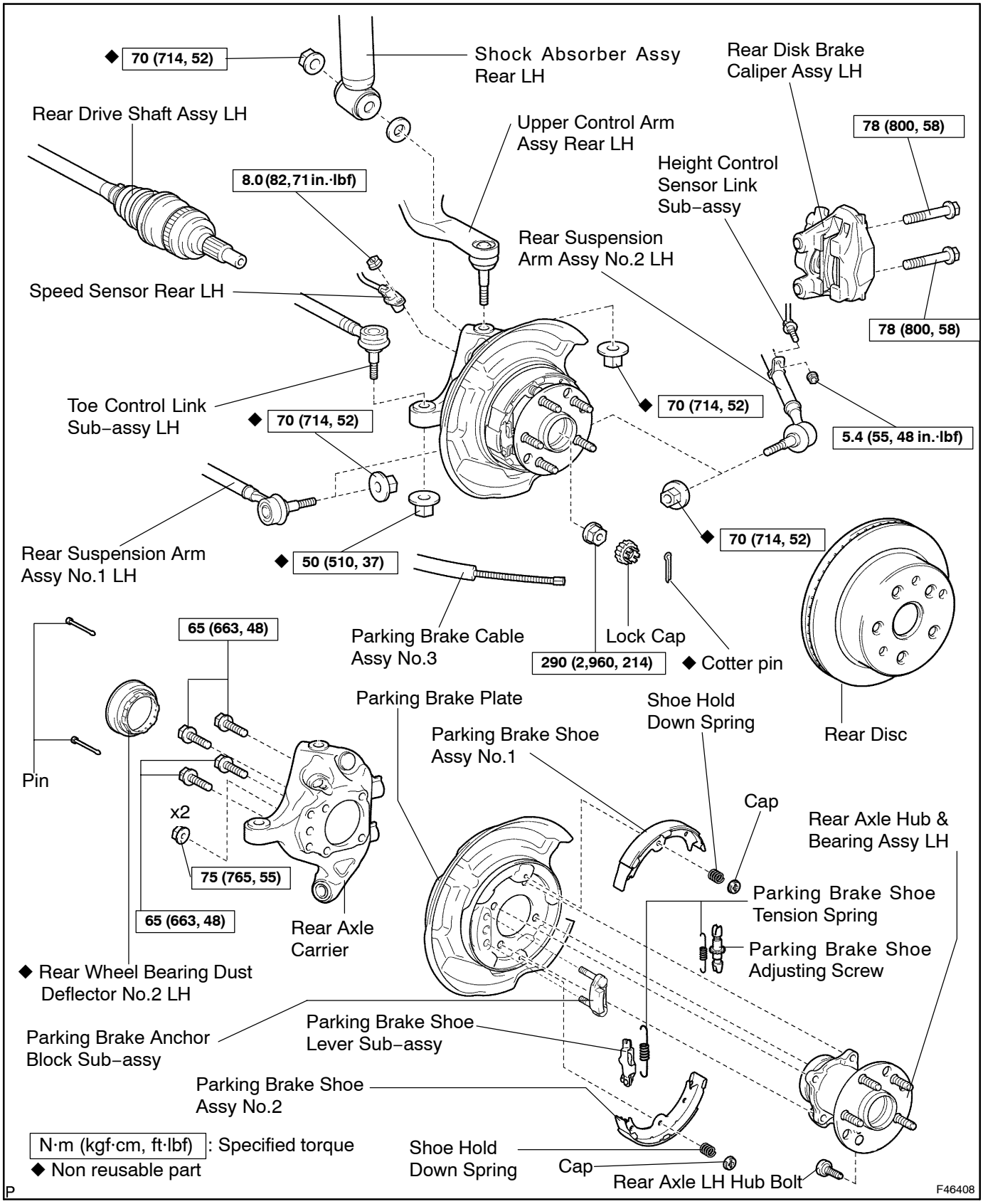
◆ 70 (714, 52)
Shock Absorber Assy Rear LH
Rear Disk Brake Caliper Assy LH
Rear Drive Shaft Assy LH
Upper Control Arm Assy Rear LH
78 (800, 58)
Height Control Sensor Link Sub–assy
8.0 (82, 71 in.·lbf)
Rear Suspension Arm Assy No.2 LH
Speed Sensor Rear LH
78 (800, 58)
Toe Control Link Sub–assy LH
◆ 70 (714, 52)
◆ 70 (714, 52)
5.4 (55, 48 in.·lbf)
Rear Suspension Arm Assy No.1 LH
◆ 50 (510, 37)
◆ 70 (714, 52)
65 (663, 48)
Parking Brake Cable Assy No.3
Lock Cap
290 (2,960, 214)
◆ Cotter pin
Parking Brake Plate
Shoe Hold Down Spring
Rear Disc
Parking Brake Shoe Assy No.1
Pin
Cap
x2
Rear Axle Hub & Bearing Assy LH
75 (765, 55)
Parking Brake Shoe Tension Spring
65 (663, 48)
Rear Axle Carrier
Parking Brake Shoe Adjusting Screw
◆ Rear Wheel Bearing Dust Deflector No.2 LH
Parking Brake Anchor Block Sub–assy
Parking Brake Shoe Lever Sub–assy
Parking Brake Shoe Assy No.2
N·m (kgf·cm, ft·lbf) : Specified torque
◆ Non reusable part
Shoe Hold Down Spring
Cap
Rear Axle LH Hub Bolt
P
F46408