SIDE AIR BAG SENSOR ASSY LH

COMPONENTS
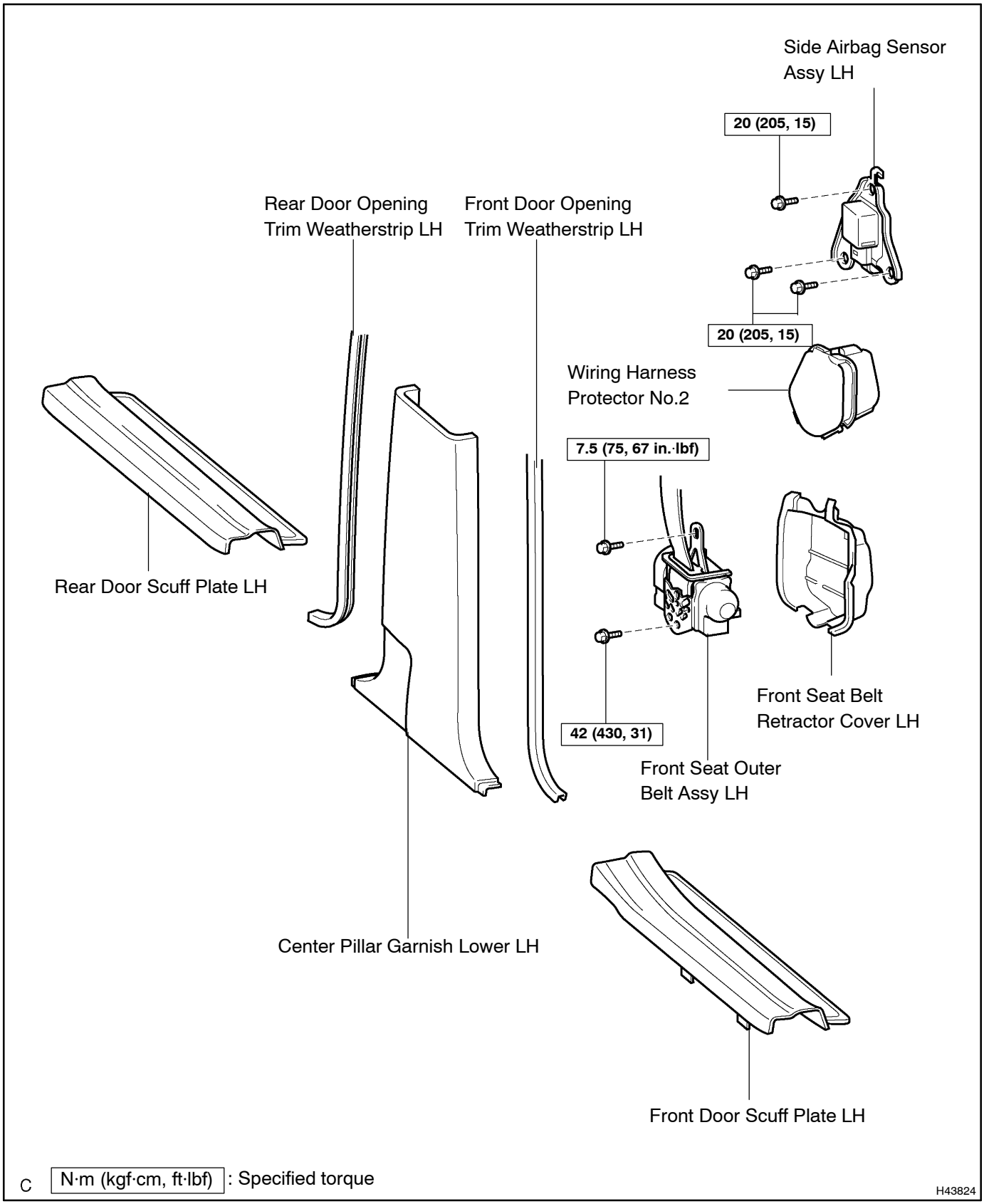
600SD–01