DTC	B2007	LEFT SIDE MOTOR LINE MALFUNCTION OPEN

CIRCUIT DESCRIPTION

The seat belt control ECU receives information from the cruise control ECU (distance control ECU) through CAN communication and then tightens the seat belt by operating the motor in the front seat outer belt LH.

NOTICE:

The pretensioner is built into the front seat outer belt LH. Be sure to follow the correct inspection procedure, as failure to follow the correct procedure (such as inspection of incorrect connectors) may activate the pretensioner.

DTC No.	DTC Detection Condition	Trouble Area
B2007	Open in seat belt motor LH circuit continues for 1 second or more	• Front seat outer belt assy LH • Wire harness (Seat belt control ECU – Front seat outer belt assy LH) • Seat belt control ECU

WIRING DIAGRAM

See page 05–109.

INSPECTION PROCEDURE

1	CHECK WIRE HARNESS (FRONT SEAT OUTER BELT ASSY LH – SEAT BELT CONTROL ECU)

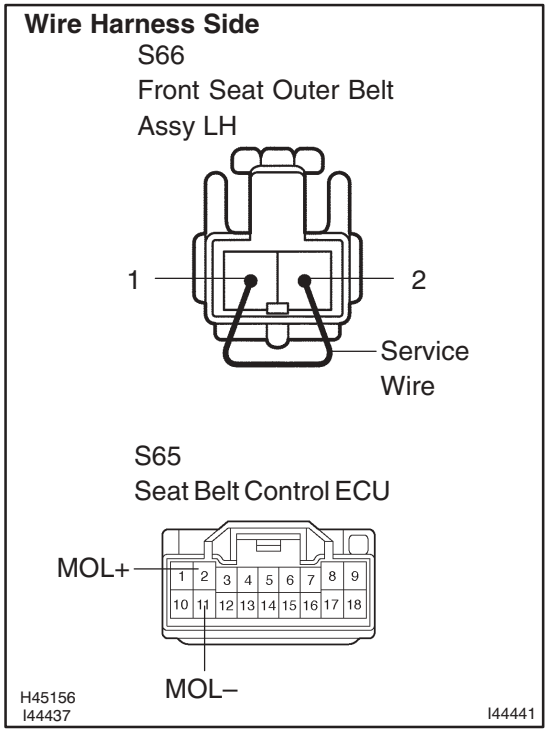

(a) Turn the ignition switch OFF.
(b) Disconnect the cable from the negative (–) battery terminal.
(c) Disconnect the S65 ECU connector.
(d) Disconnect the S66 belt connector.
(e) Using a service wire, connect terminals 1 and 2 of the seat belt connector.

NOTICE:
Do not forcibly insert a service wire into the terminals of a connector.

(f) Measure the resistance of the wire harness side connector.
Standard:

Tester Connection	Specified Condition
S65–2 (MOL+) – S65–11 (MOL–)	Below 1 Ω

NG → **REPAIR OR REPLACE HARNESS AND CONNECTOR**

OK

2	CHECK FRONT SEAT OUTER BELT ASSY LH

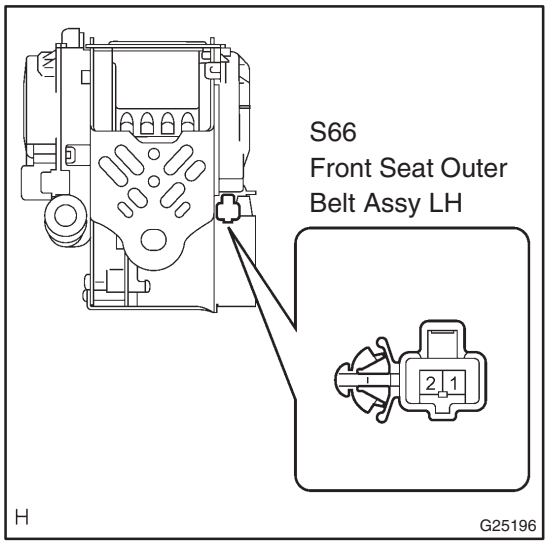

(a) Measure the resistance of the seat belt connector.
Standard:

Tester Connection	Specified Condition
S66–1 – S66–2	Below 1 Ω

NG → **REPLACE FRONT SEAT OUTER BELT ASSY LH (See Pub. No. RM1049E, page 61–17)**

OK

REPLACE SEAT BELT CONTROL ECU (See page 61–1)