AC23W–02

LOCATION

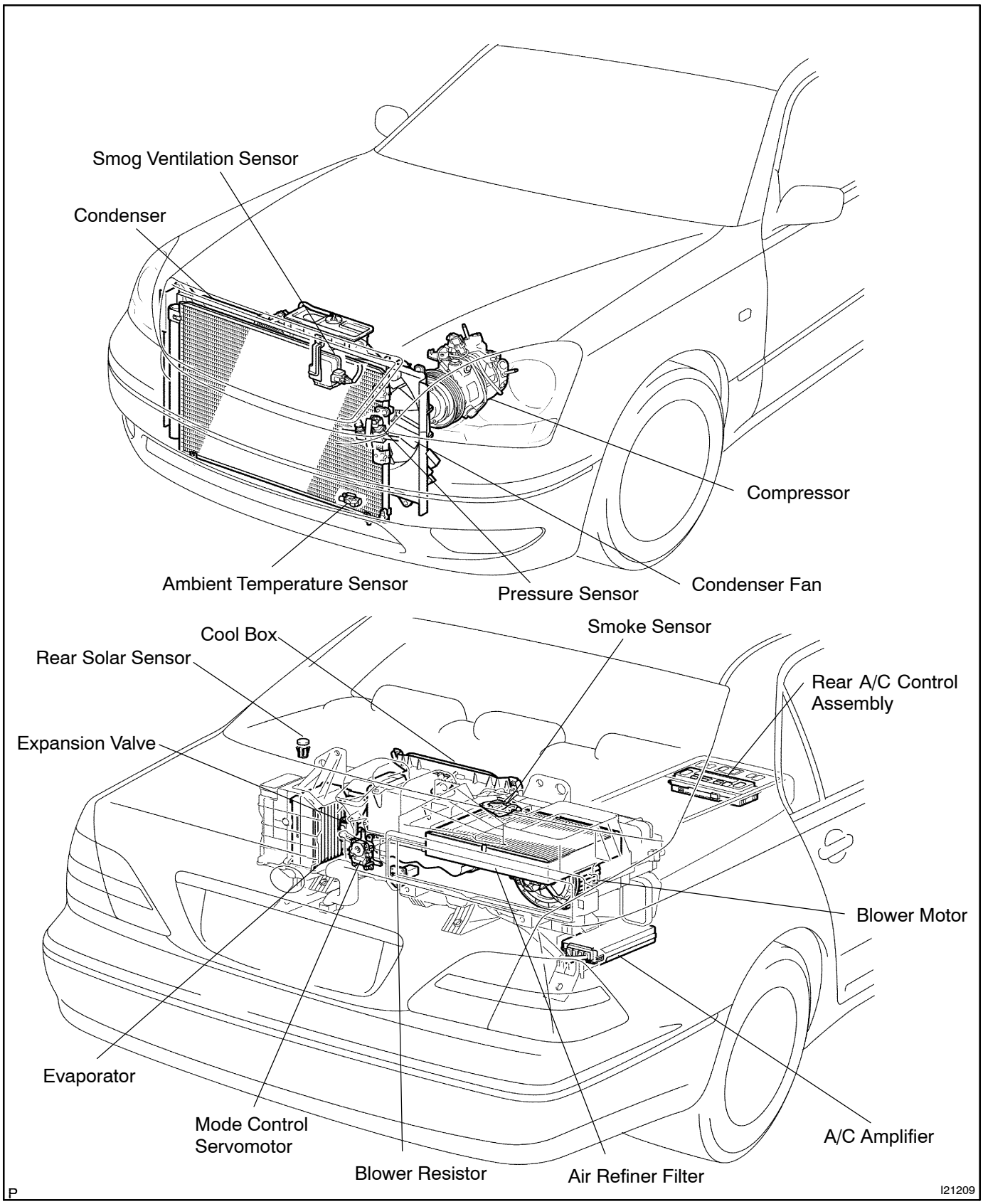

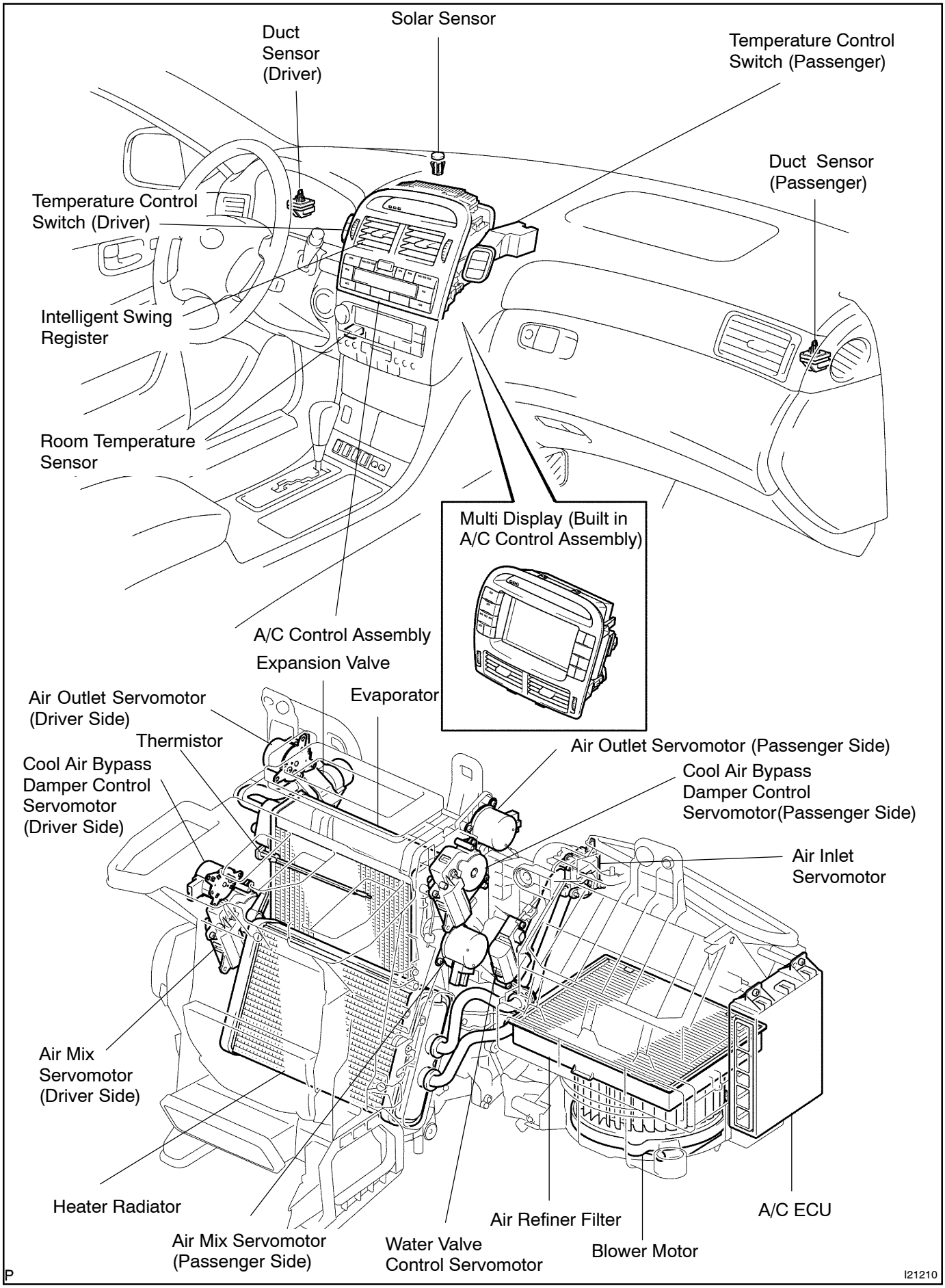
Solar Sensor
Duct Sensor (Driver)
Temperature Control Switch (Passenger)
Duct Sensor (Passenger)
Temperature Control Switch (Driver)
Intelligent Swing Register
Room Temperature Sensor
Multi Display (Built in A/C Control Assembly)
A/C Control Assembly
Expansion Valve
Evaporator
Air Outlet Servomotor (Driver Side)
Thermistor
Cool Air Bypass Damper Control Servomotor (Driver Side)
Air Outlet Servomotor (Passenger Side)
Cool Air Bypass Damper Control Servomotor(Passenger Side)
Air Inlet Servomotor
Air Mix Servomotor (Driver Side)
Heater Radiator
Air Mix Servomotor (Passenger Side)
Water Valve Control Servomotor
Air Refiner Filter
Blower Motor
A/C ECU
P
I21210