POWER SEAT CONTROL SYSTEM

BE229–01

LOCATION

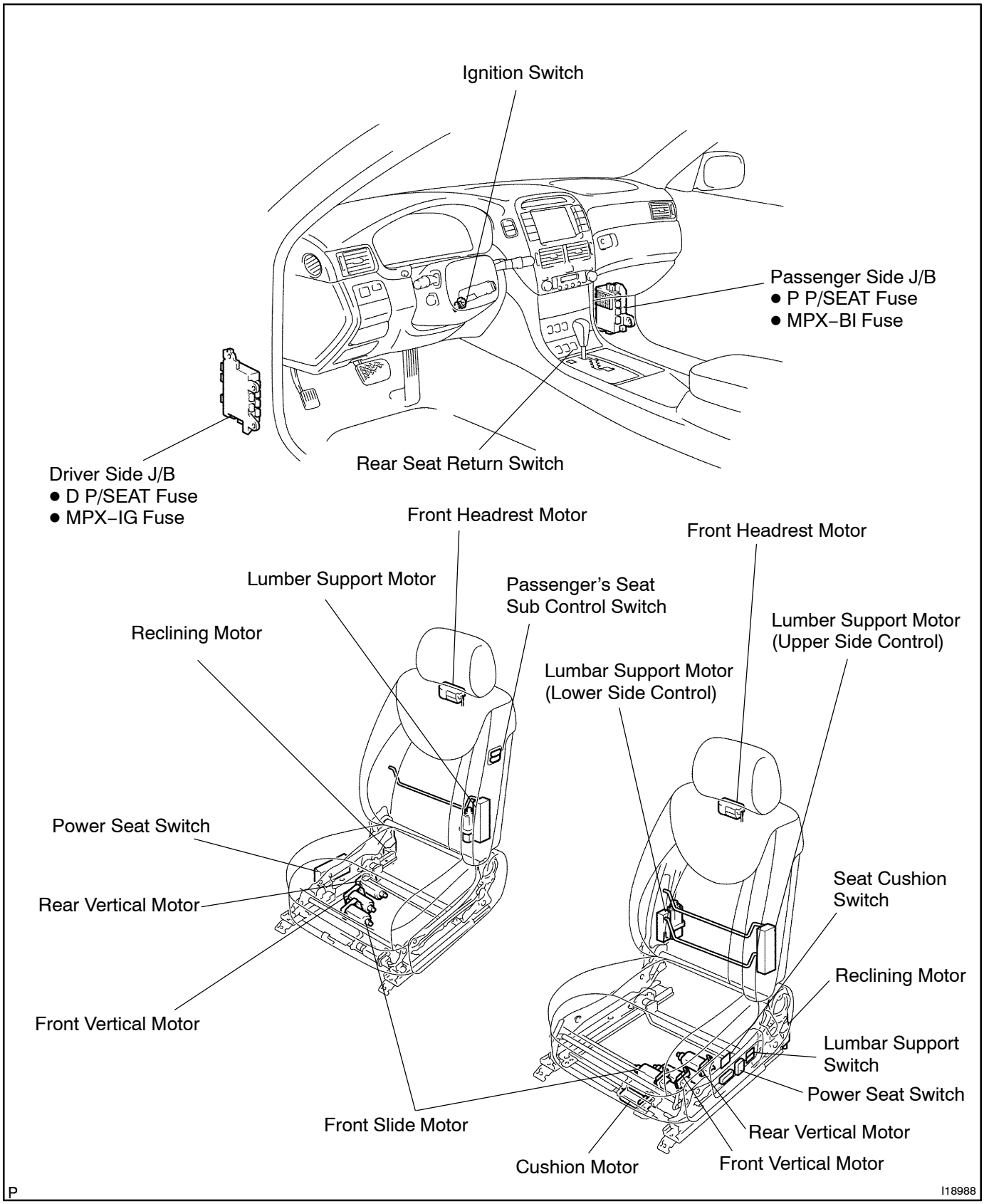

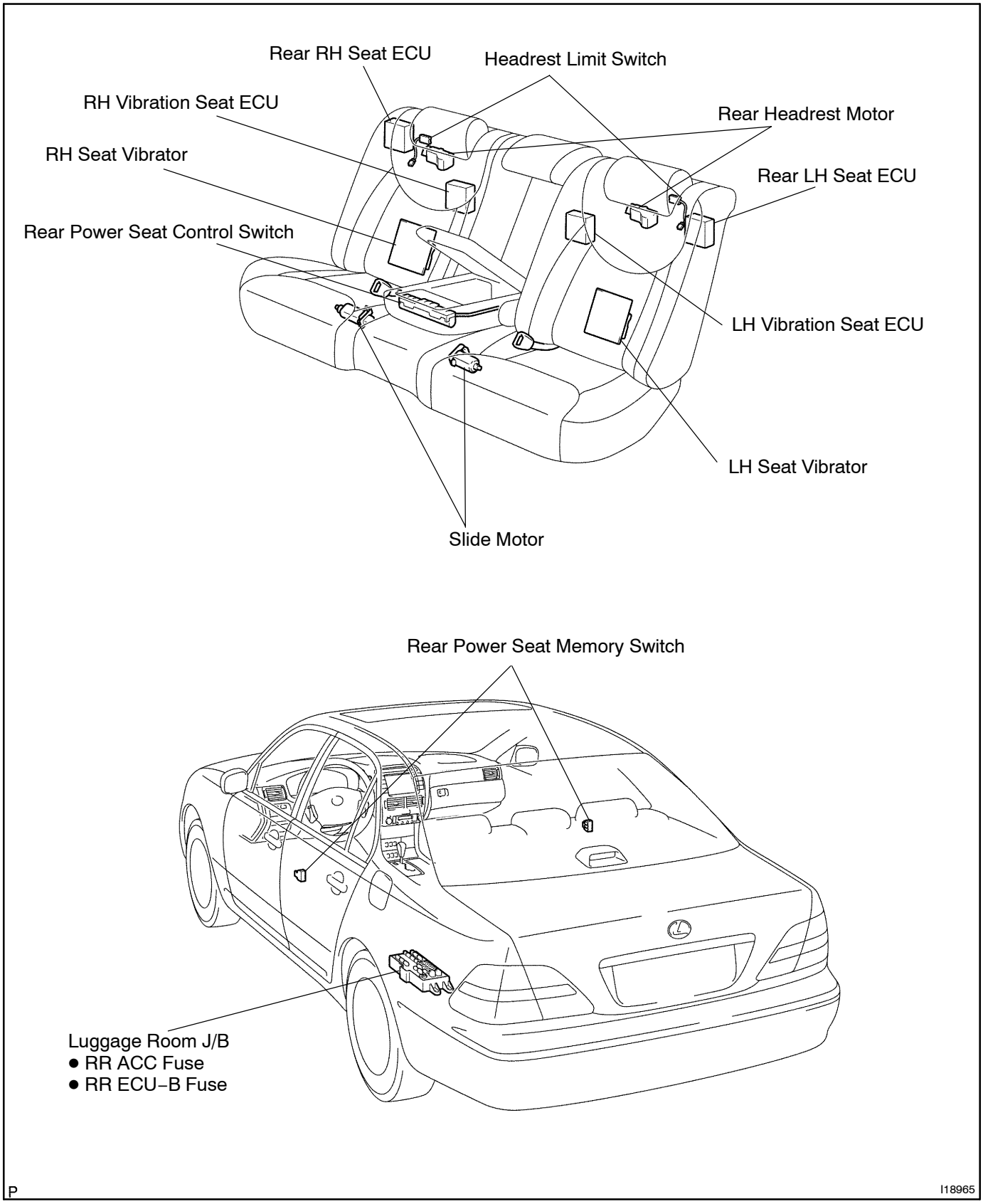
Rear RH Seat ECU
Headrest Limit Switch
RH Vibration Seat ECU
Rear Headrest Motor
RH Seat Vibrator
Rear LH Seat ECU
Rear Power Seat Control Switch
LH Vibration Seat ECU
LH Seat Vibrator
Slide Motor
Rear Power Seat Memory Switch
Luggage Room J/B
● RR ACC Fuse
● RR ECU–B Fuse
P
I18965