CO07O–04

COMPONENTS

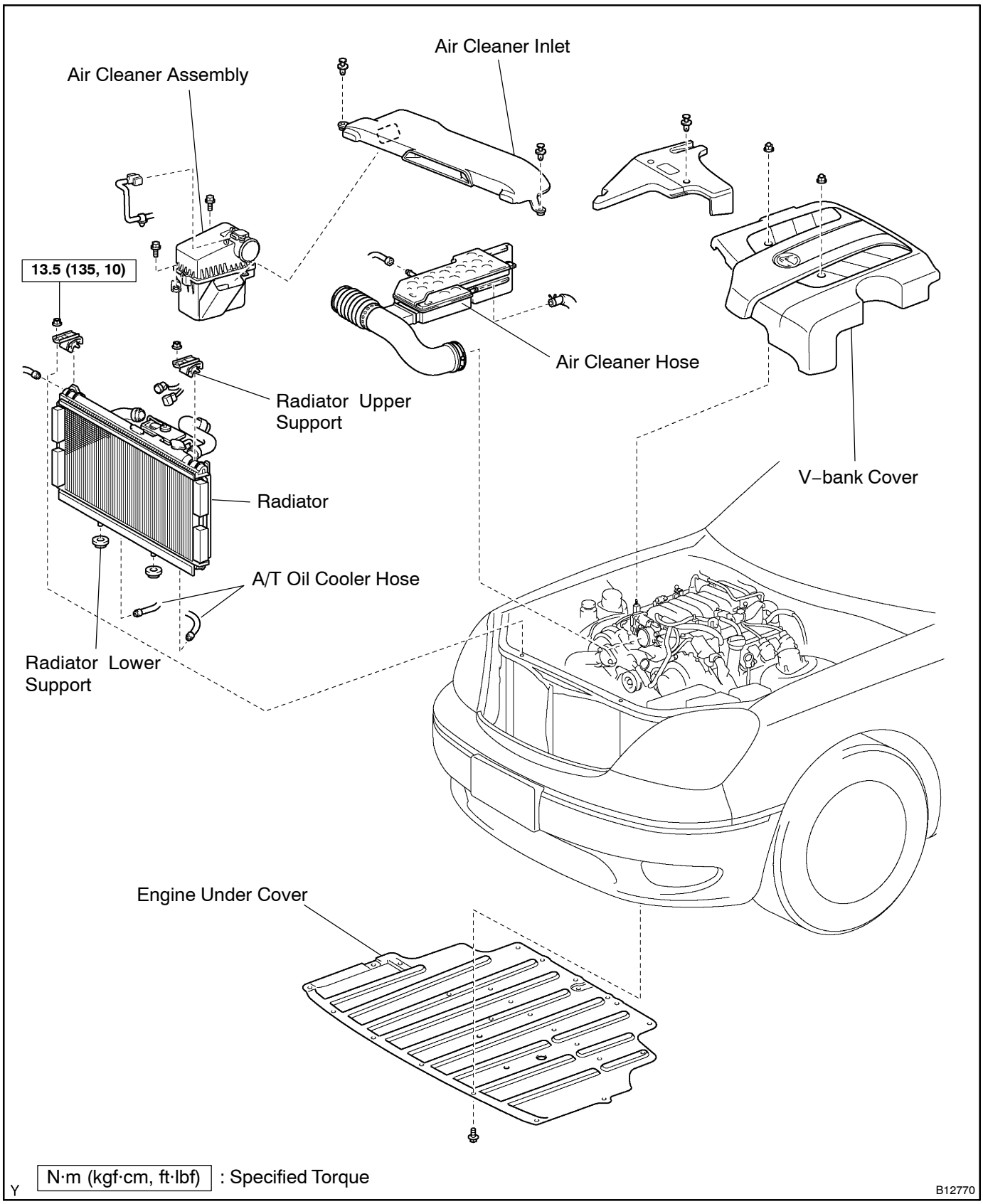

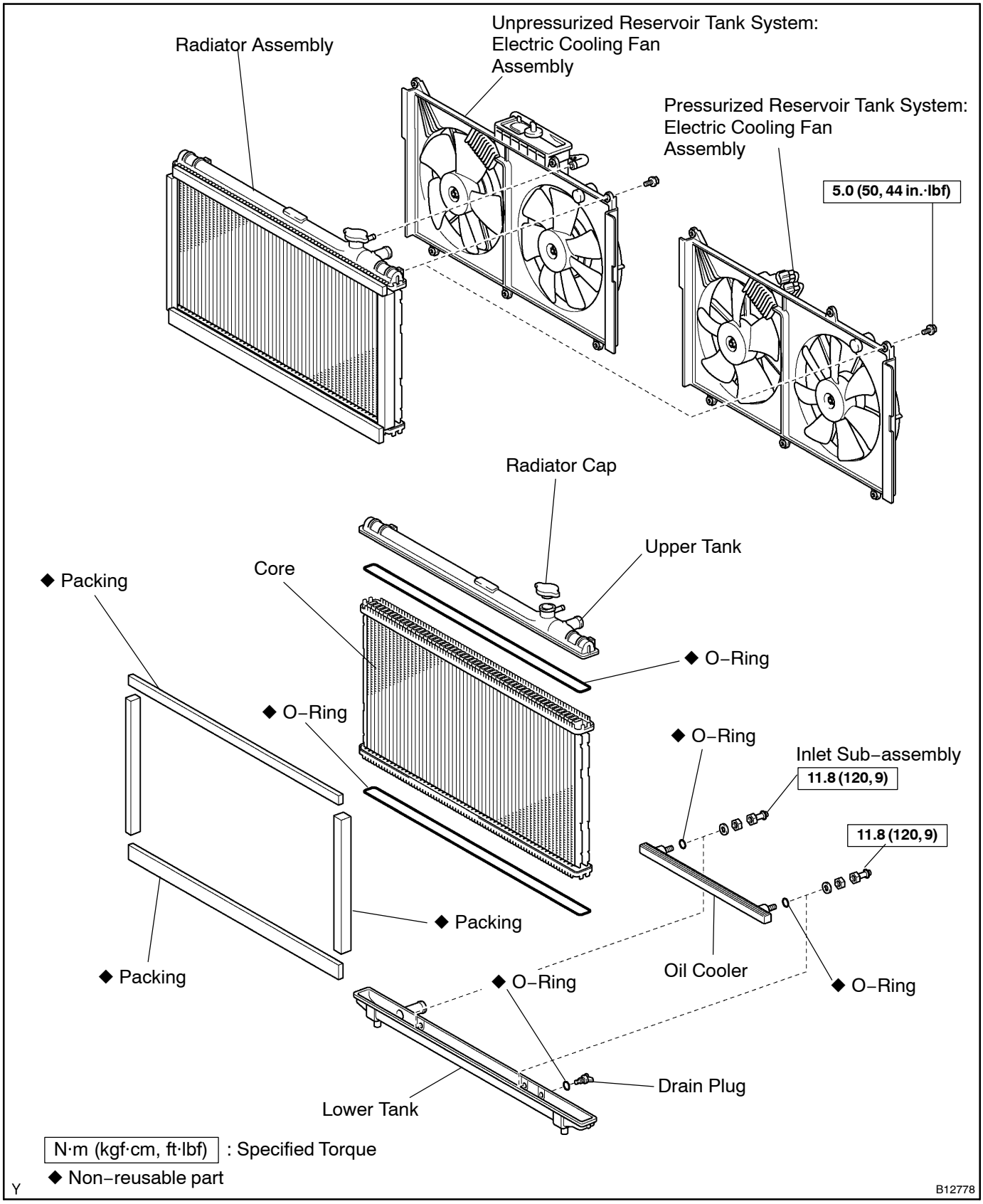
Radiator Assembly
Unpressurized Reservoir Tank System:
Electric Cooling Fan
Assembly
Pressurized Reservoir Tank System:
Electric Cooling Fan
Assembly
5.0 (50, 44 in.·lbf)
Radiator Cap
Upper Tank
Core
◆ Packing
◆ O–Ring
◆ O–Ring
◆ O–Ring
Inlet Sub–assembly
11.8 (120, 9)
11.8 (120, 9)
◆ Packing
◆ Packing
Oil Cooler
◆ O–Ring
◆ O–Ring
Drain Plug
Lower Tank
N·m (kgf·cm, ft·lbf) : Specified Torque
◆ Non–reusable part
Y
B12778