VSV FOR ACOUSTIC CONTROL INDUCTION SYSTEM (ACIS)

FI0YH–01

COMPONENTS

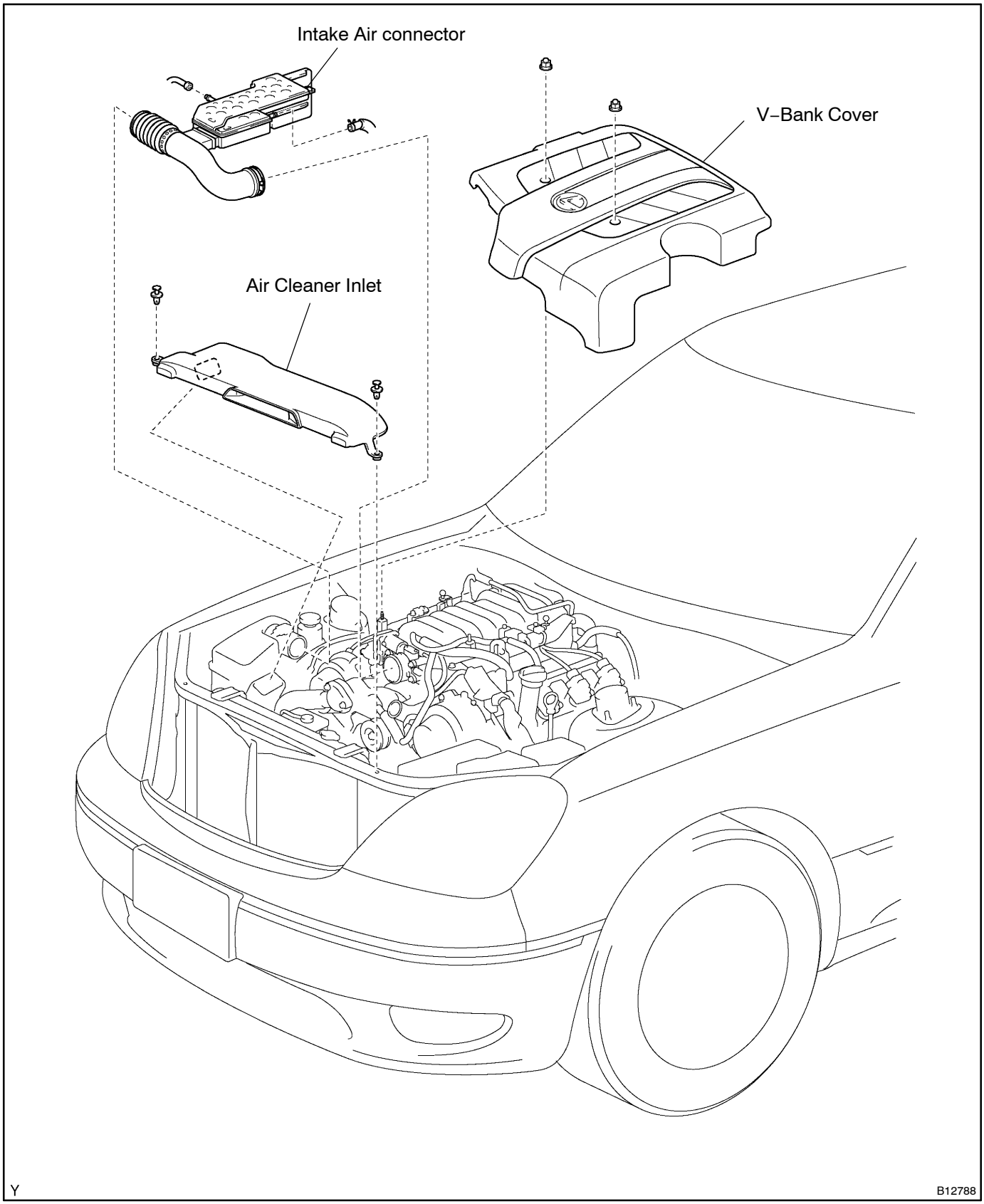

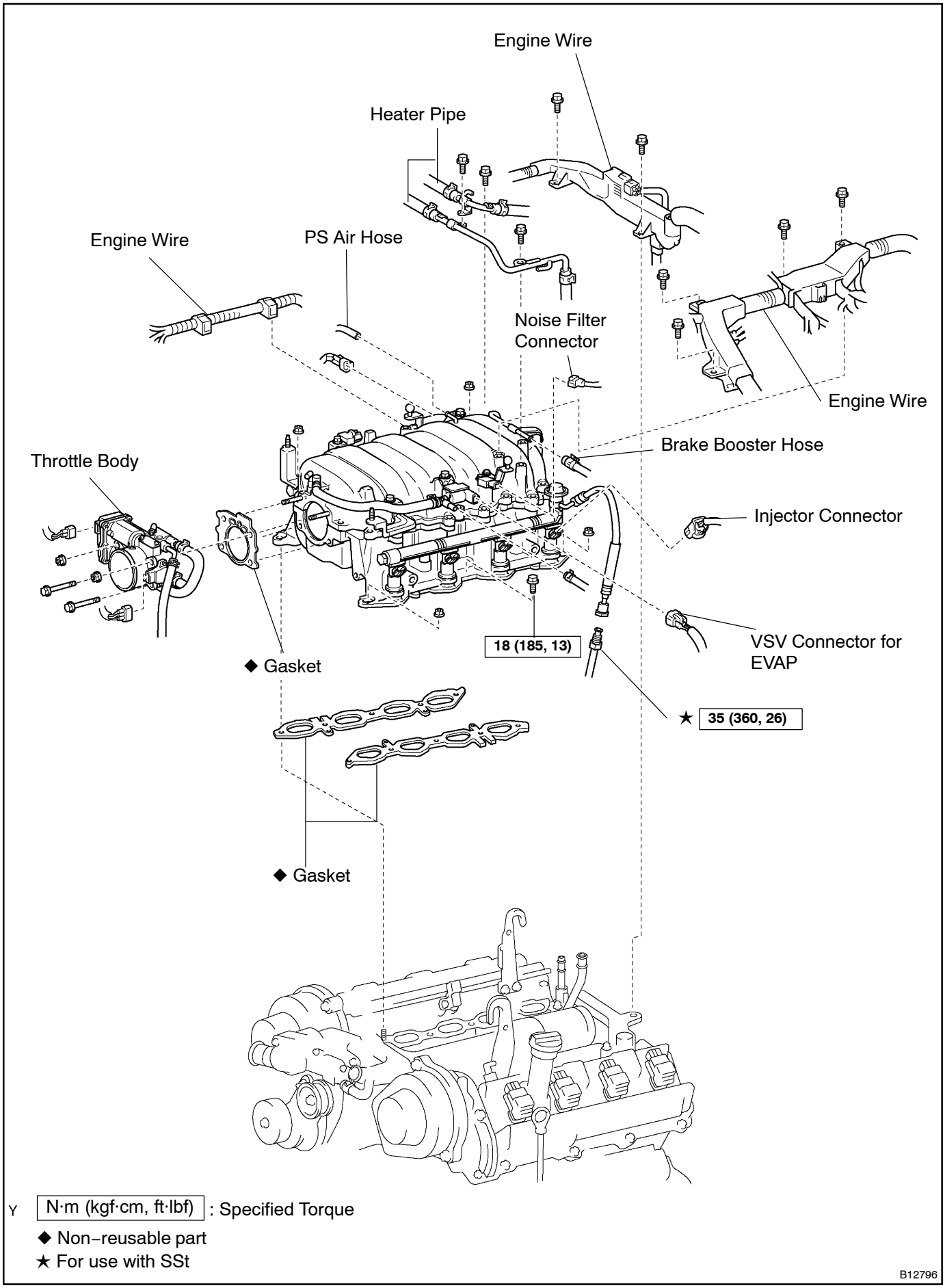
Engine Wire
Heater Pipe
Engine Wire
PS Air Hose
Noise Filter Connector
Engine Wire
Brake Booster Hose
Throttle Body
Injector Connector
18 (185, 13)
VSV Connector for EVAP
◆ Gasket
★ 35 (360, 26)
◆ Gasket
Y N·m (kgf·cm, ft·lbf) : Specified Torque
◆ Non–reusable part
★ For use with SSt
B12796

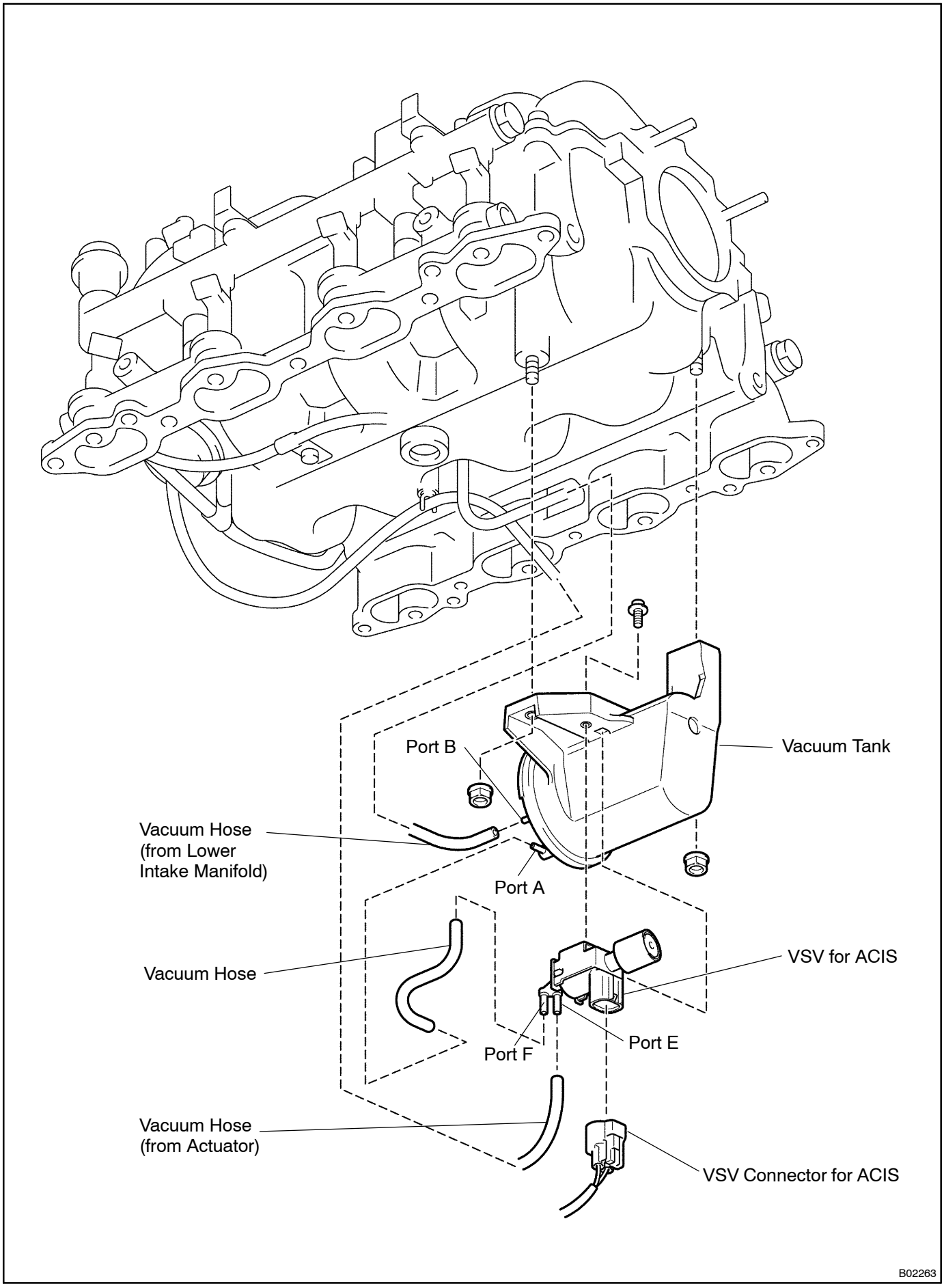
Port B
Vacuum Tank
Vacuum Hose
(from Lower
Intake Manifold)
Port A
Vacuum Hose
VSV for ACIS
Port F
Port E
Vacuum Hose
(from Actuator)
VSV Connector for ACIS
B02263