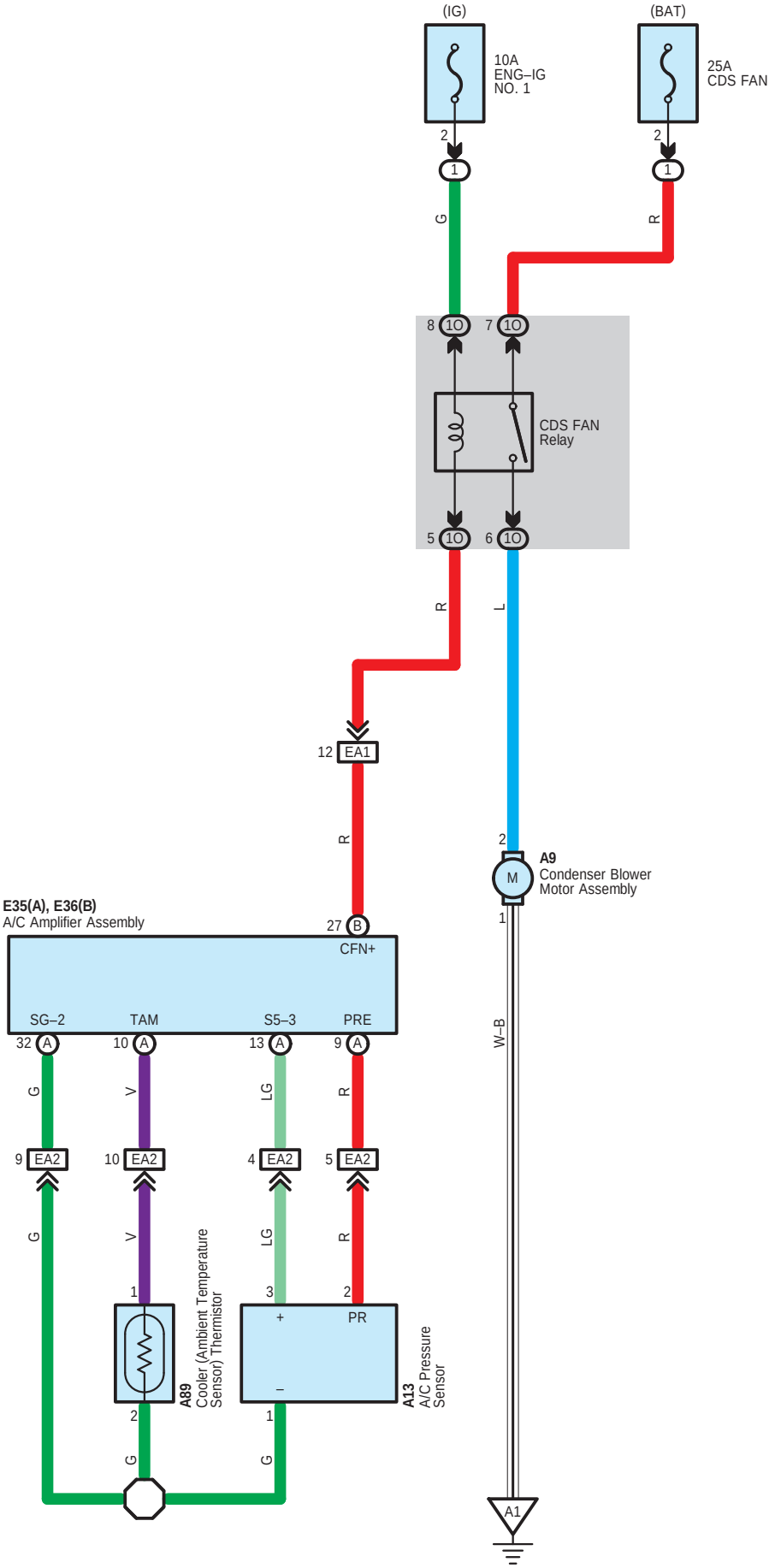
(IG)
(BAT)
10A
ENG–IG
NO. 1
25A
CDS FAN
CDS FAN
Relay
A9
Condenser Blower
Motor Assembly
E35(A), E36(B)
A/C Amplifier Assembly
CFN+
SG–2
TAM
S5–3
PRE
A89
Cooler (Ambient Temperature
Sensor) Thermistor
A13
A/C Pressure
Sensor
PR
A1

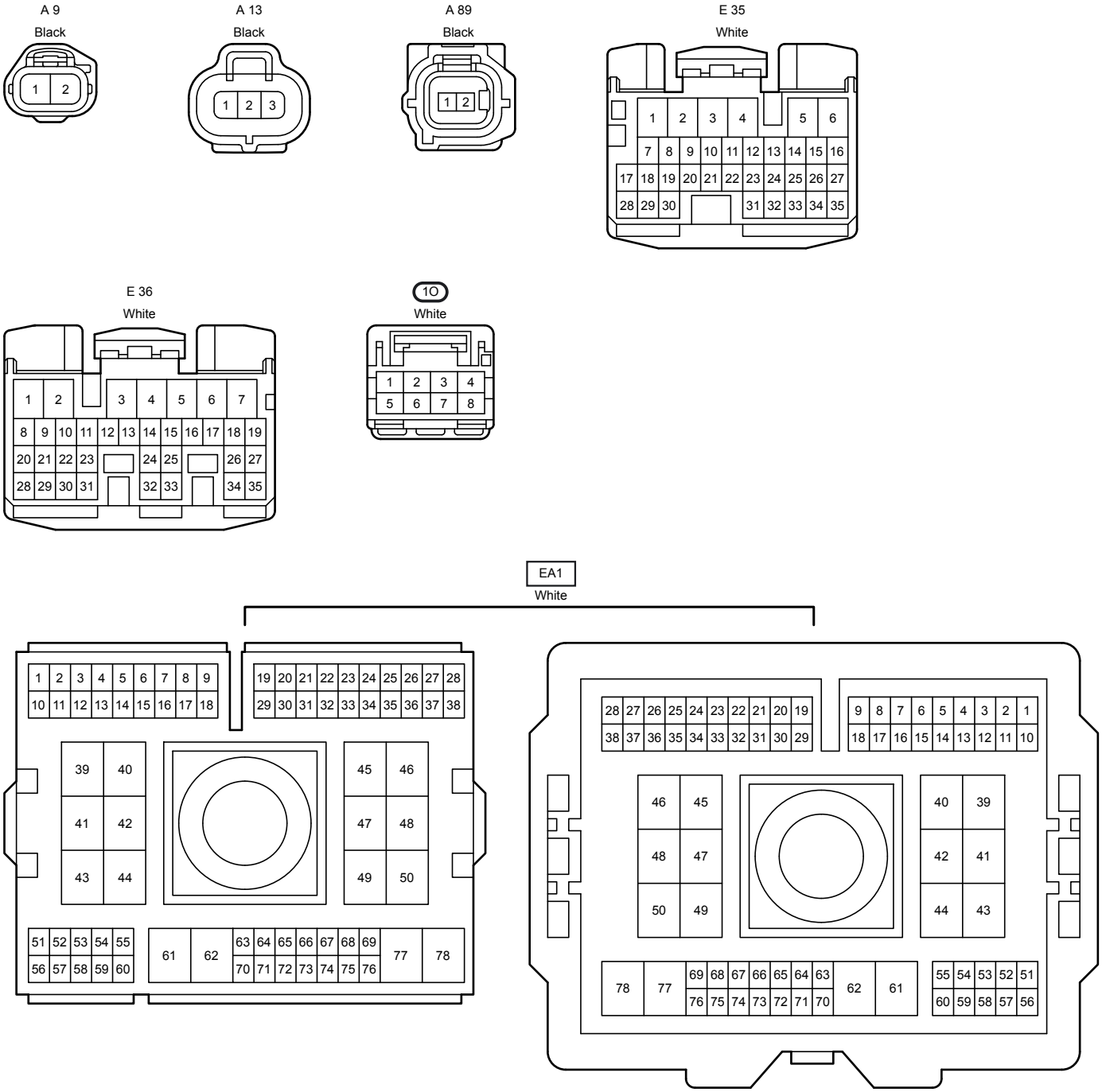
A 9
Black
A 13
Black
A 89
Black
E 35
White
E 36
White
1O
White
EA1
White

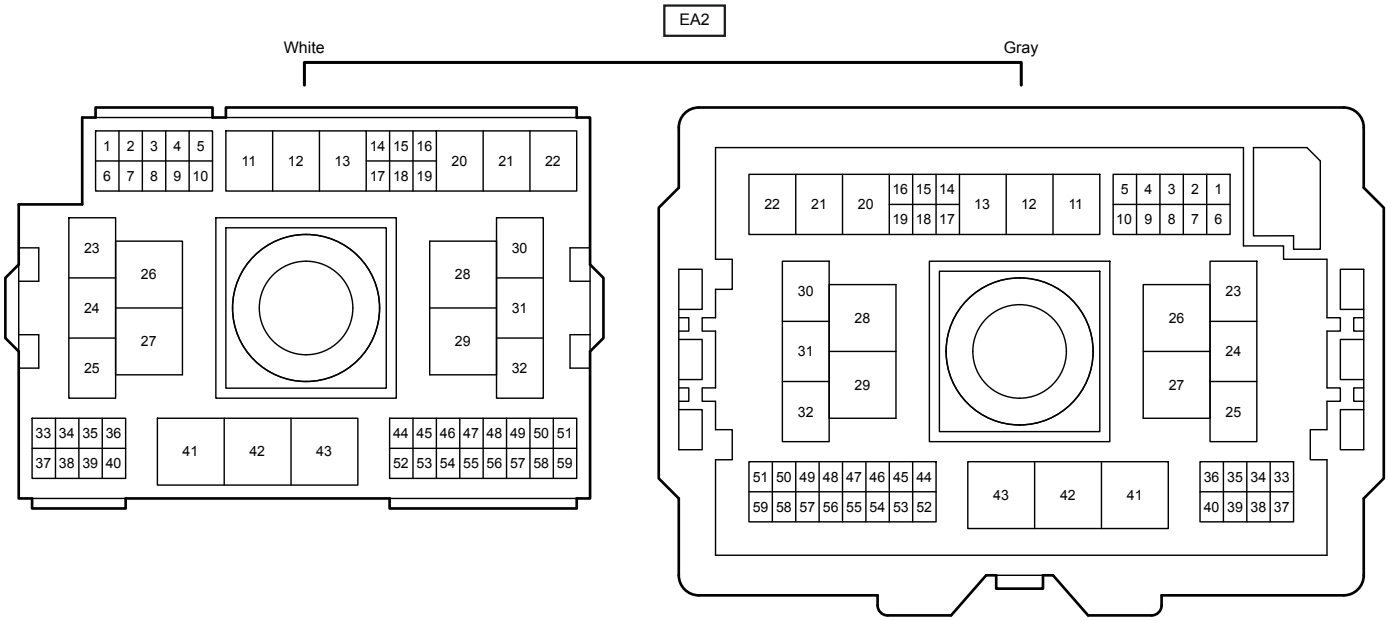
EA2
White
Gray
1 2 3 4 5
6 7 8 9 10
11 12 13 14 15 16
17 18 19 20 21 22
23 24 25 26 27
28 29 30 31 32
33 34 35 36
37 38 39 40
41 42 43
44 45 46 47 48 49 50 51
52 53 54 55 56 57 58 59
22 21 20 16 15 14
19 18 17 13 12 11
5 4 3 2 1
10 9 8 7 6
30 31 32 28 29
26 27 23 24 25
51 50 49 48 47 46 45 44
59 58 57 56 55 54 53 52
43 42 41
36 35 34 33
40 39 38 37