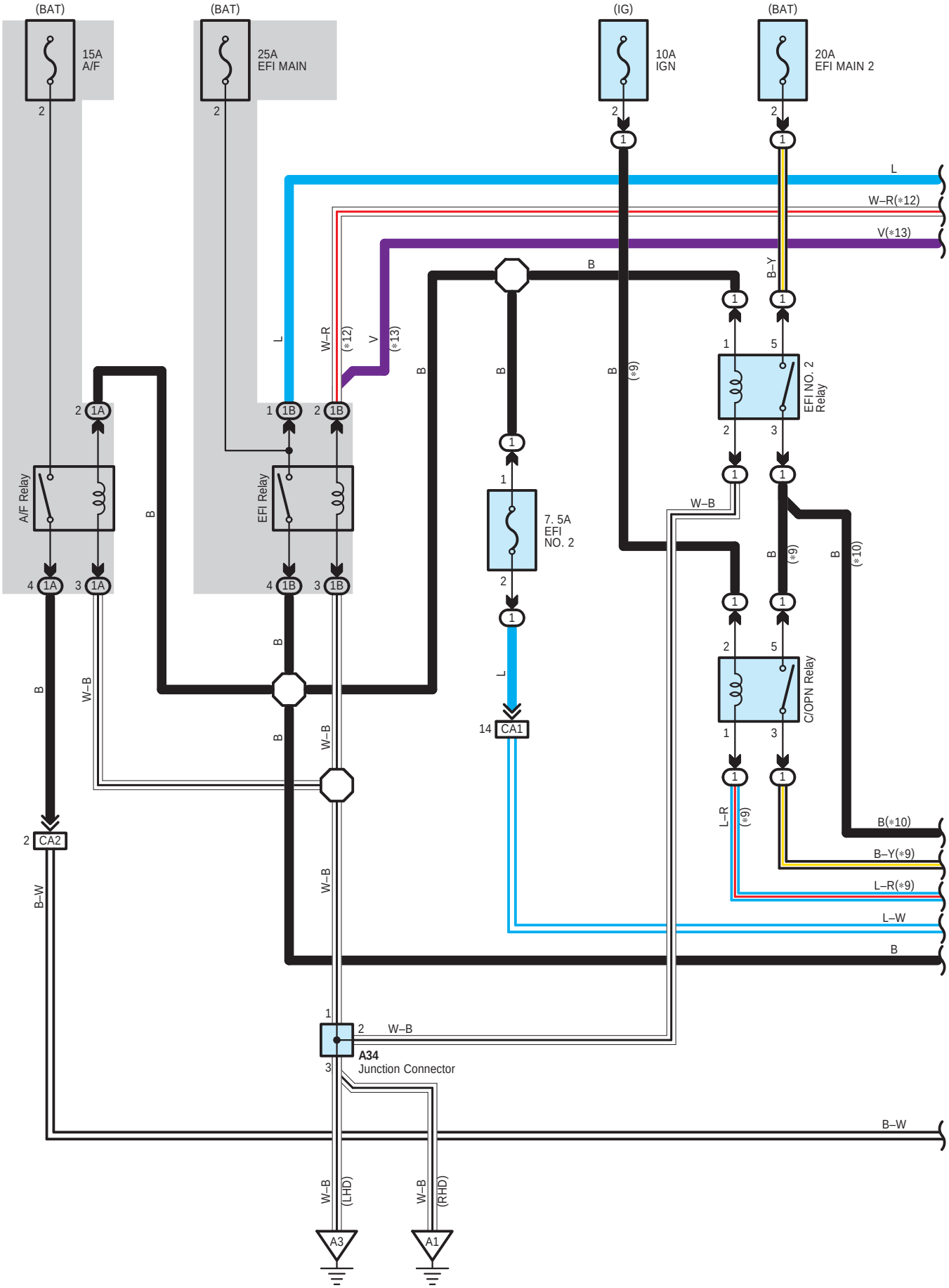
(BAT)
15A
A/F
(BAT)
25A
EFI MAIN
(IG)
10A
IGN
(BAT)
20A
EFI MAIN 2
L
W–R(*12)
V(*13)
B
B–Y
A/F Relay
EFI Relay
EFI NO. 2
Relay
7. 5A
EFI
NO. 2
C/OPN Relay
W–B
B(*10)
B–Y(*9)
L–R(*9)
L–W
B
CA2
CA1
B–W
A34
Junction Connector
(LHD)
(RHD)
A3
A1

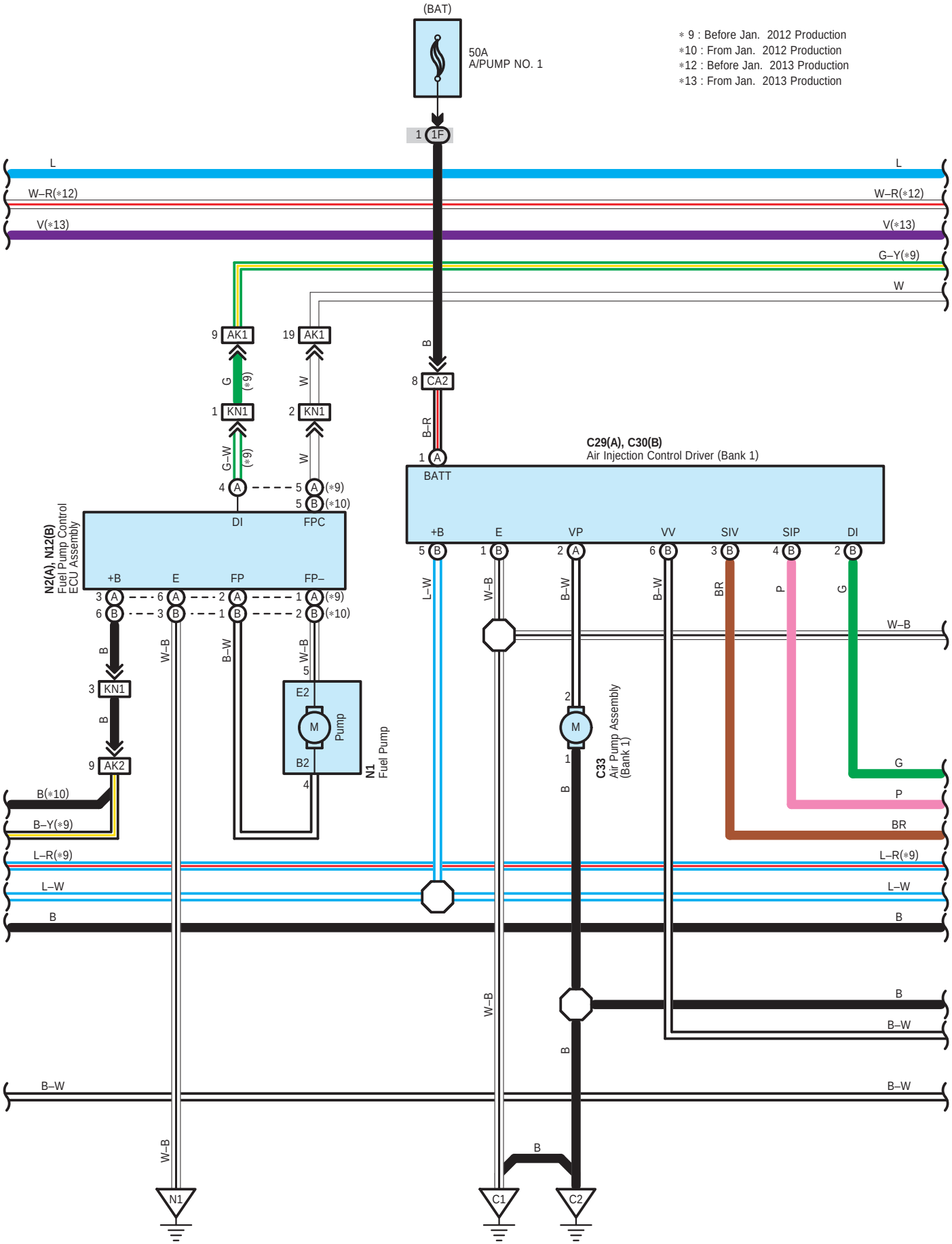
(BAT)
50A
A/PUMP NO. 1
∗ 9 : Before Jan. 2012 Production
∗10 : From Jan. 2012 Production
∗12 : Before Jan. 2013 Production
∗13 : From Jan. 2013 Production
1 1F
L
W–R(∗12)
V(∗13)
G–Y(∗9)
W
9 AK1
19 AK1
G
(∗9)
W
1 KN1
2 KN1
G–W
(∗9)
W
B
8 CA2
B–R
1 A
BATT
C29(A), C30(B)
Air Injection Control Driver (Bank 1)
+B
E
VP
VV
SIV
SIP
DI
N2(A), N12(B)
Fuel Pump Control
ECU Assembly
DI
FPC
+B
E
FP
FP–
4 A
5 A (∗9)
5 B (∗10)
3 A
6 B
6 A
3 B
2 A
1 B
1 A (∗9)
2 B (∗10)
B
3 KN1
B
9 AK2
B(∗10)
B–Y(∗9)
W–B
B–W
W–B
5
E2
M
Pump
B2
4
N1
Fuel Pump
L–W
W–B
B–W
B–W
BR
P
G
W–B
2
M
1
B
C33
Air Pump Assembly
(Bank 1)
G
P
BR
L–R(∗9)
L–W
B
B
B–W
W–B
B
B–W
W–B
B
N1
C1
C2

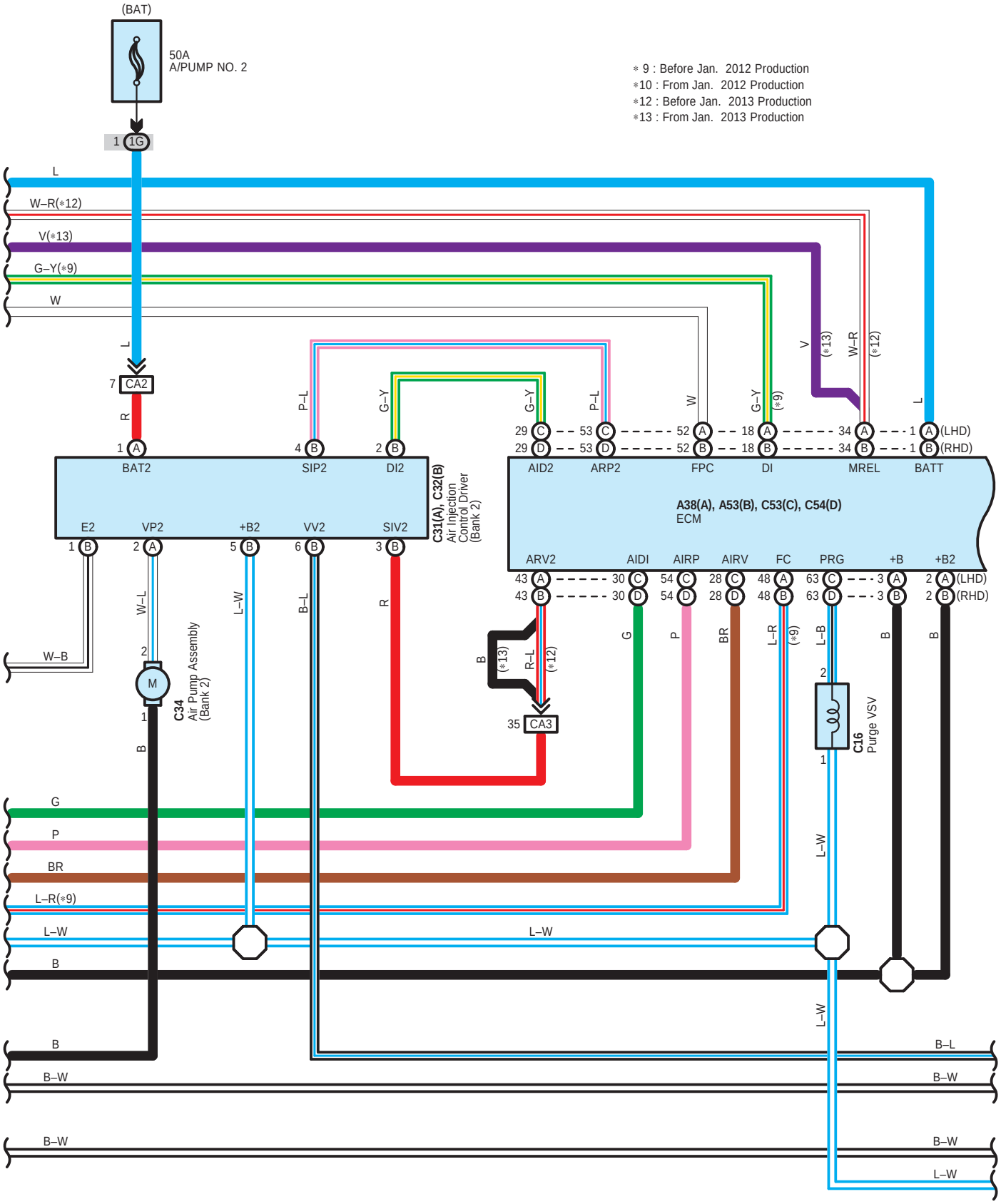
(BAT)
50A
A/PUMP NO. 2
1 1G
∗ 9 : Before Jan. 2012 Production
∗10 : From Jan. 2012 Production
∗12 : Before Jan. 2013 Production
∗13 : From Jan. 2013 Production
L
W–R(∗12)
V(∗13)
G–Y(∗9)
W
7 CA2
1 A BAT2
4 B SIP2
2 B DI2
C31(A), C32(B)
Air Injection
Control Driver
(Bank 2)
E2
VP2
+B2
VV2
SIV2
1 B
2 A
5 B
6 B
3 B
W–B
W–L
L–W
B–L
R
2
M
1
C34
Air Pump Assembly
(Bank 2)
B
29 C
29 D
53 C
53 D
52 A
52 B
18 A
18 B
34 A
34 B
1 A (LHD)
1 B (RHD)
AID2
ARP2
FPC
DI
MREL
BATT
A38(A), A53(B), C53(C), C54(D)
ECM
ARV2
AIDI
AIRP
AIRV
FC
PRG
+B
+B2
43 A
43 B
30 C
30 D
54 C
54 D
28 C
28 D
48 A
48 B
63 C
63 D
3 A
3 B
2 A (LHD)
2 B (RHD)
G
P
BR
L–R
(∗9)
L–B
(∗13)
R–L
(∗12)
35 CA3
C16
Purge VSV
G
P
BR
L–R(∗9)
L–W
B
B–W

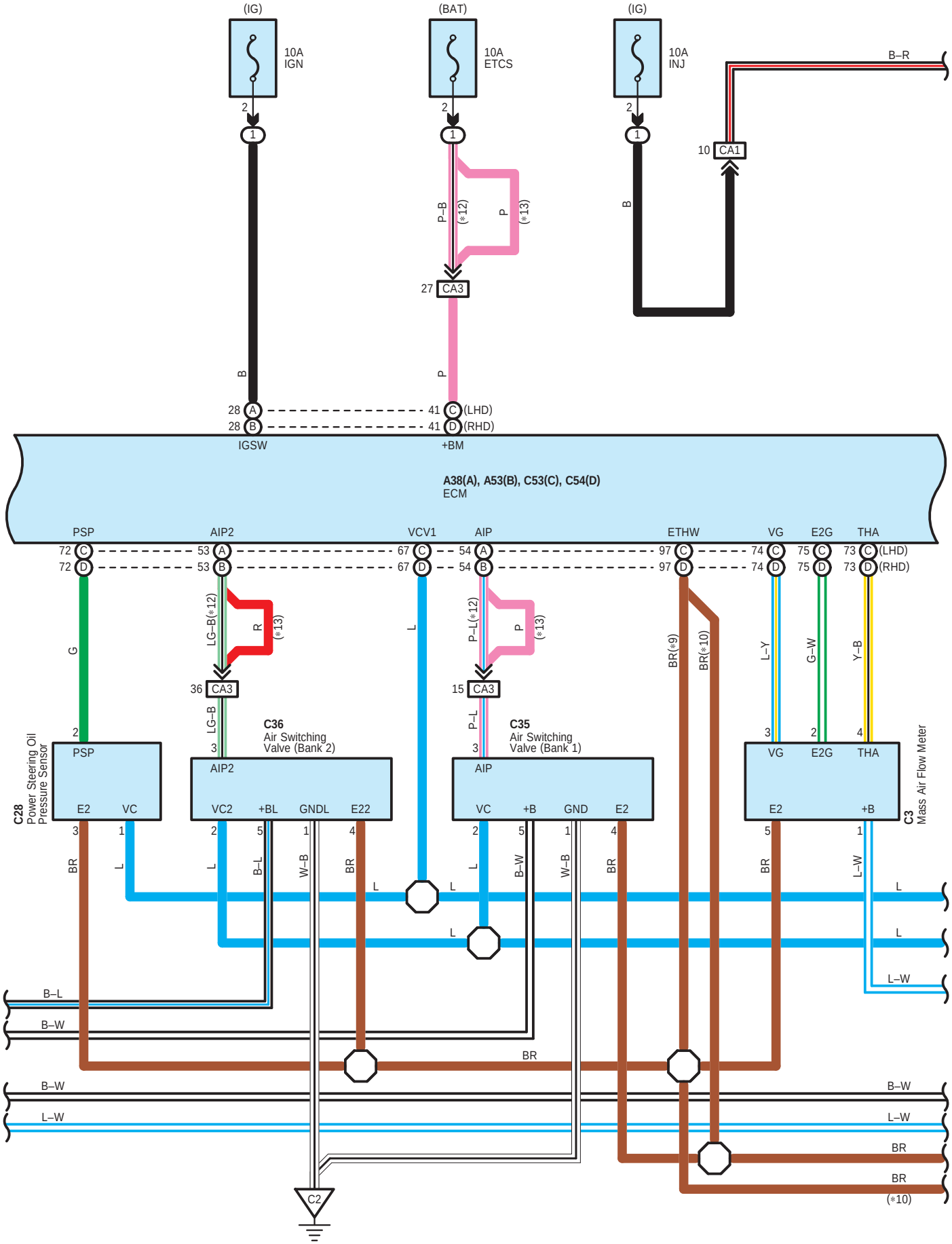
(IG)
10A
IGN
(BAT)
10A
ETCS
(IG)
10A
INJ
B–R
10 CA1
P–B
(*12)
P
(*13)
27 CA3
B
P
28 A
28 B
41 C (LHD)
41 D (RHD)
IGSW
+BM
A38(A), A53(B), C53(C), C54(D)
ECM
PSP
AIP2
VCV1
AIP
ETHW
VG
E2G
THA
72 C
72 D
53 A
53 B
67 C
67 D
54 A
54 B
97 C
97 D
74 C
74 D
75 C
75 D
73 C (LHD)
73 D (RHD)
G
LG–B(*12)
R
(*13)
L
P–L(*12)
P
(*13)
BR(*9)
BR(*10)
L–Y
G–W
Y–B
36 CA3
15 CA3
LG–B
P–L
C36
Air Switching
Valve (Bank 2)
C35
Air Switching
Valve (Bank 1)
C28
Power Steering Oil
Pressure Sensor
PSP
E2
VC
AIP2
VC2
+BL
GNDL
E22
AIP
VC
+B
GND
E2
VG
E2G
THA
E2
+B
C3
Mass Air Flow Meter
BR
L
B–L
W–B
B–W
L–W
C2
(*10)

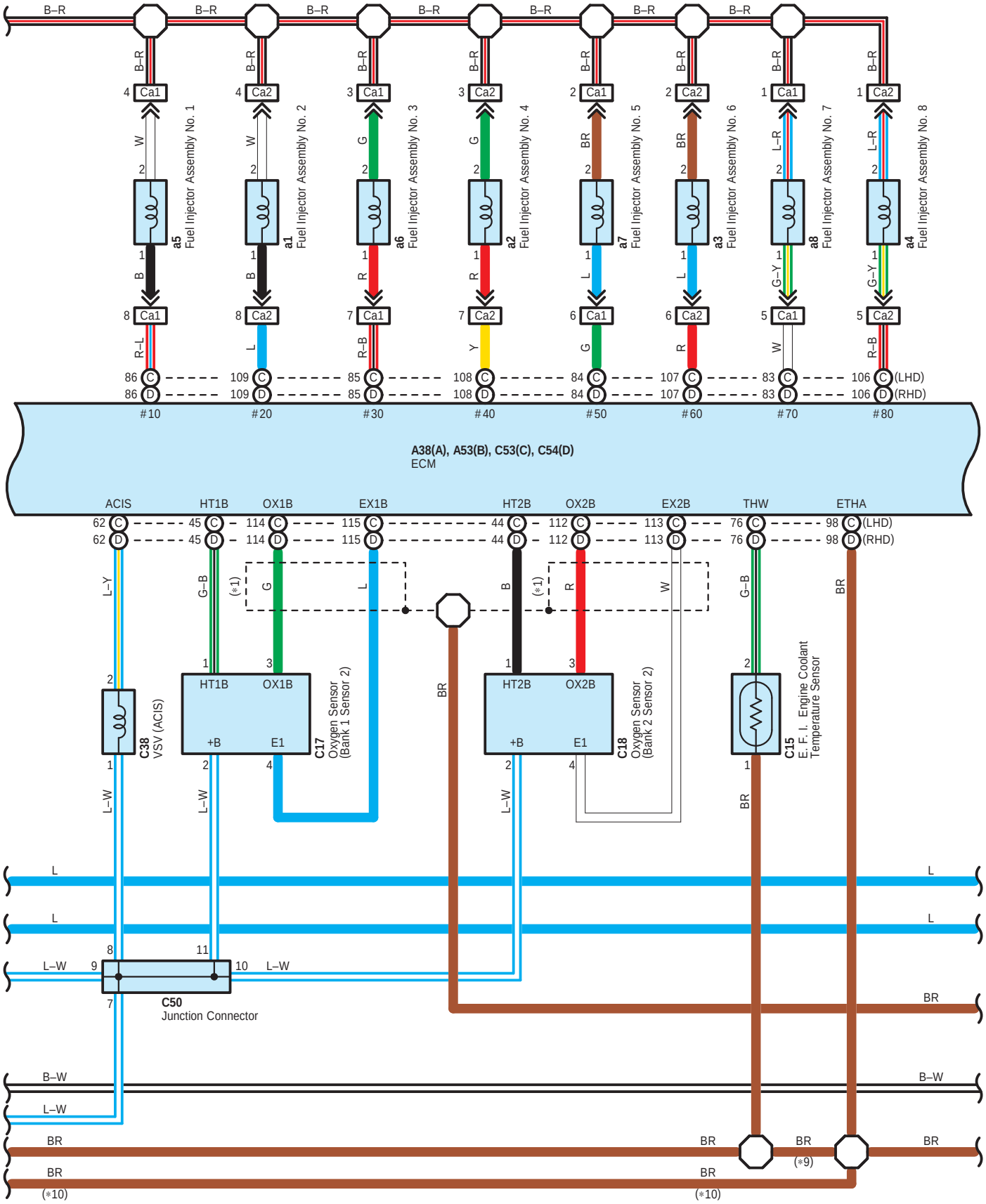
B–R
a5 Fuel Injector Assembly No. 1
a1 Fuel Injector Assembly No. 2
a6 Fuel Injector Assembly No. 3
a2 Fuel Injector Assembly No. 4
a7 Fuel Injector Assembly No. 5
a3 Fuel Injector Assembly No. 6
a8 Fuel Injector Assembly No. 7
a4 Fuel Injector Assembly No. 8
Ca1
Ca2
#10
#20
#30
#40
#50
#60
#70
#80
(LHD)
(RHD)
A38(A), A53(B), C53(C), C54(D)
ECM
ACIS
HT1B
OX1B
EX1B
HT2B
OX2B
EX2B
THW
ETHA
C38 VSV (ACIS)
C17 Oxygen Sensor (Bank 1 Sensor 2)
C18 Oxygen Sensor (Bank 2 Sensor 2)
C15 E. F. I. Engine Coolant Temperature Sensor
+B
E1
(*1)
C50
Junction Connector
(*9)
(*10)

∗ 1 : Shielded
∗ 9 : Before Jan. 2012 Production
∗10 : From Jan. 2012 Production

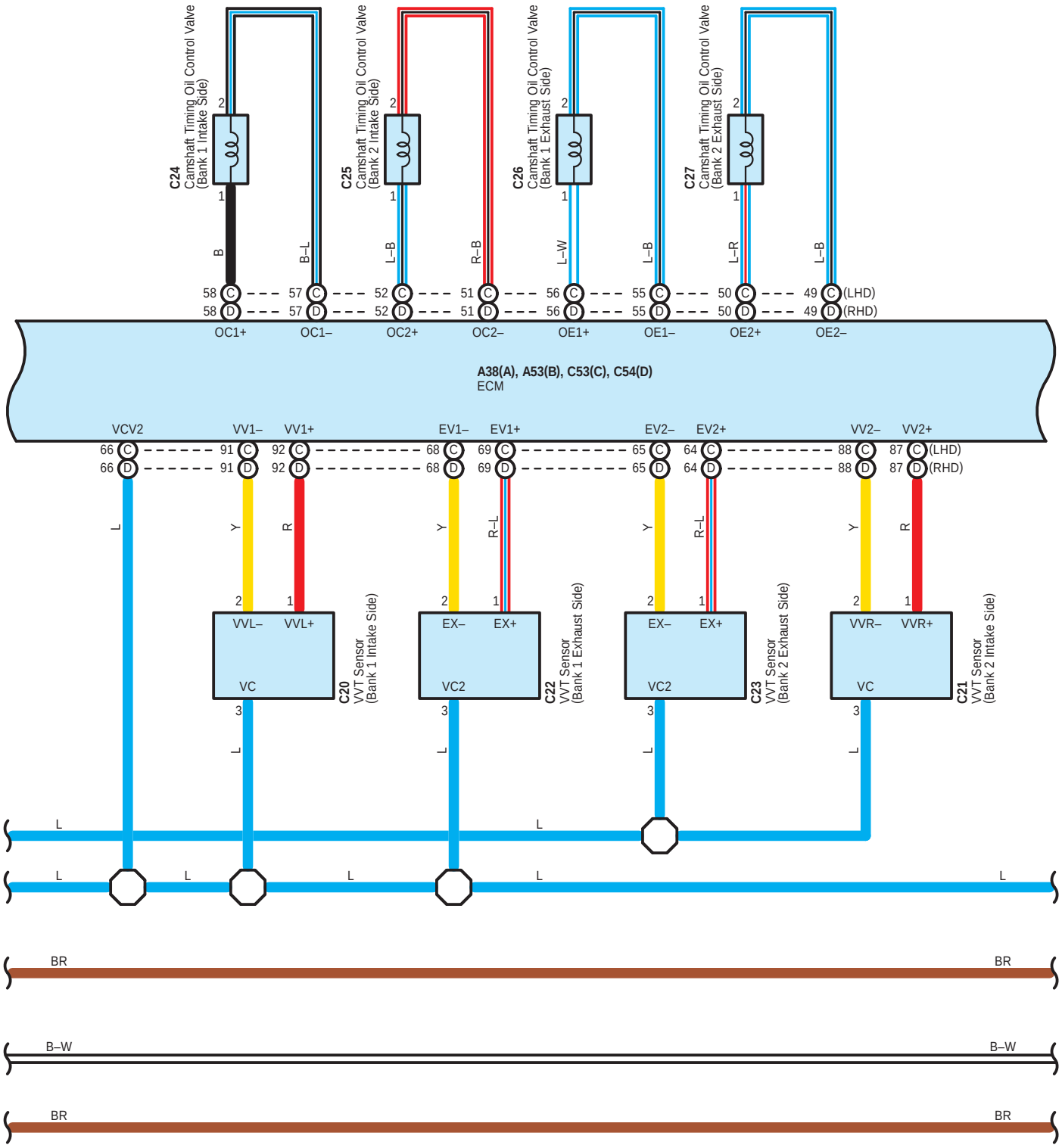

∗ 1 : Shielded
∗ 3 : Before Jul. 2009 Production
∗ 4 : From Jul. 2009 Production
∗ 7 : Before Aug. 2010 Production
∗ 8 : From Aug. 2010 Production
∗ 9 : Before Jan. 2012 Production
∗10 : From Jan. 2012 Production
∗12 : Before Jan. 2013 Production
∗13 : From Jan. 2013 Production

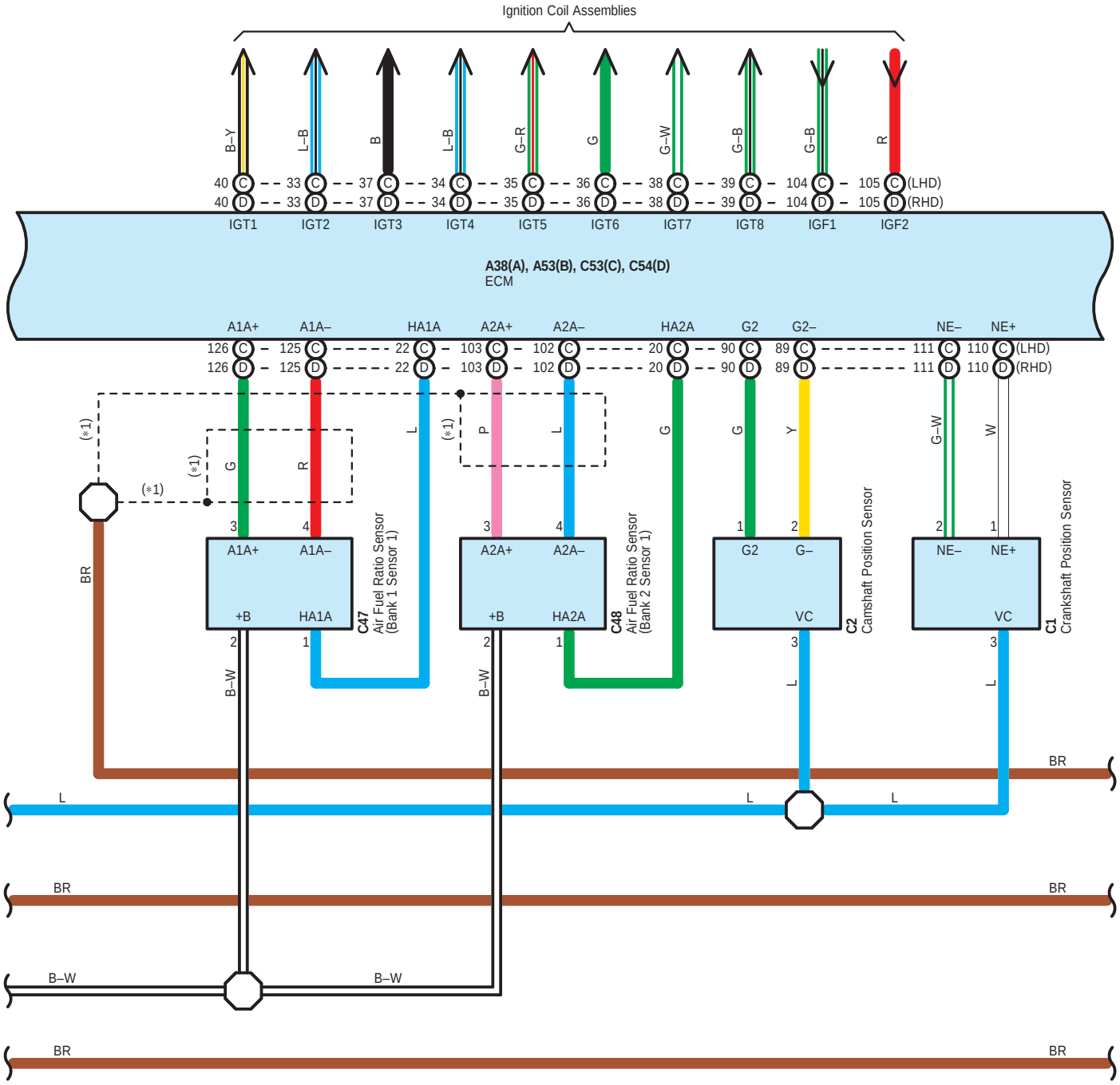

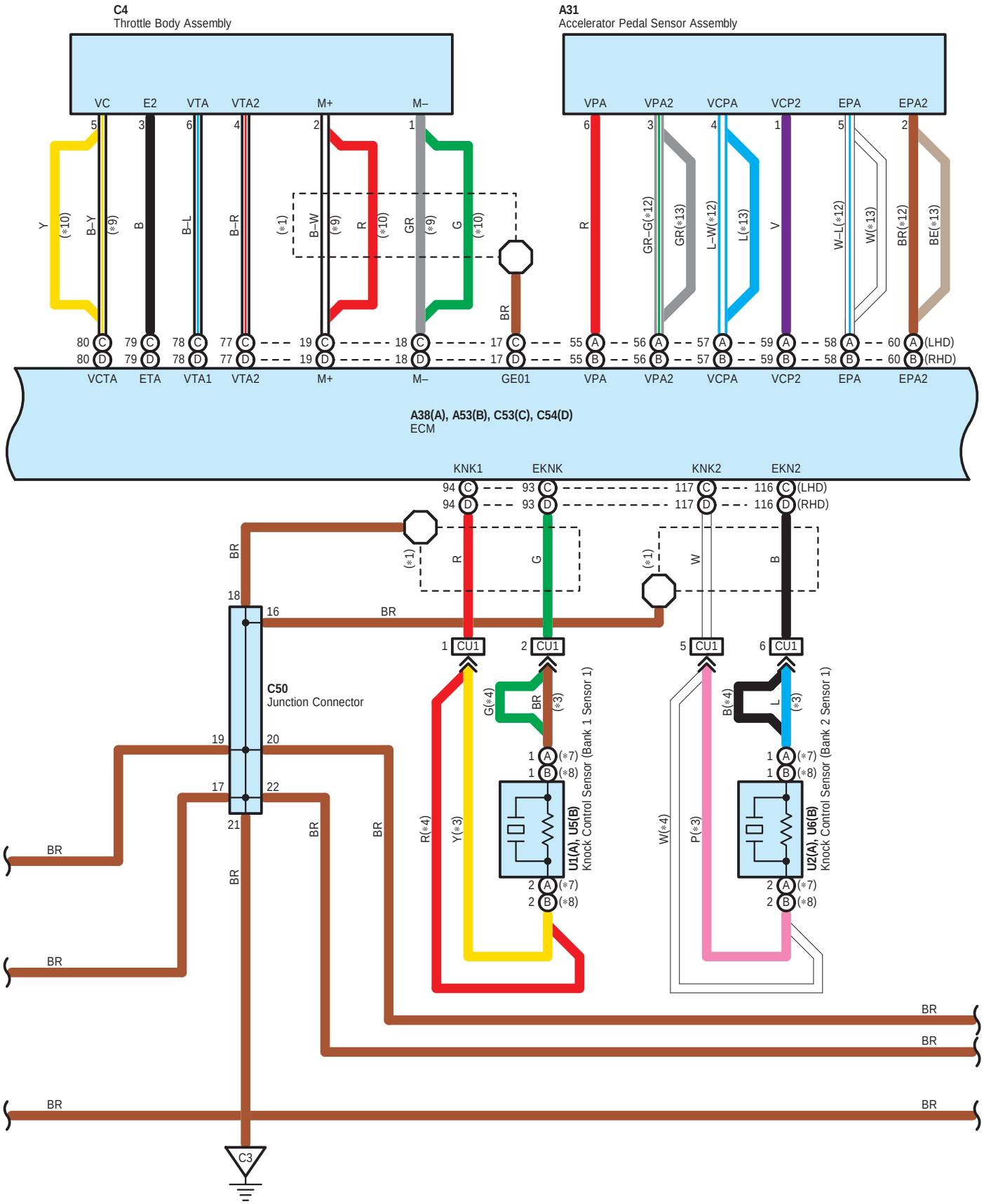
C4
Throttle Body Assembly
VC
E2
VTA
VTA2
M+
M–
A31
Accelerator Pedal Sensor Assembly
VPA
VPA2
VCPA
VCP2
EPA
EPA2
VCTA
ETA
VTA1
GE01
A38(A), A53(B), C53(C), C54(D)
ECM
KNK1
EKNK
KNK2
EKN2
(LHD)
(RHD)
C50
Junction Connector
U1(A), U5(B)
Knock Control Sensor (Bank 1 Sensor 1)
U2(A), U6(B)
Knock Control Sensor (Bank 2 Sensor 1)
CU1
C3

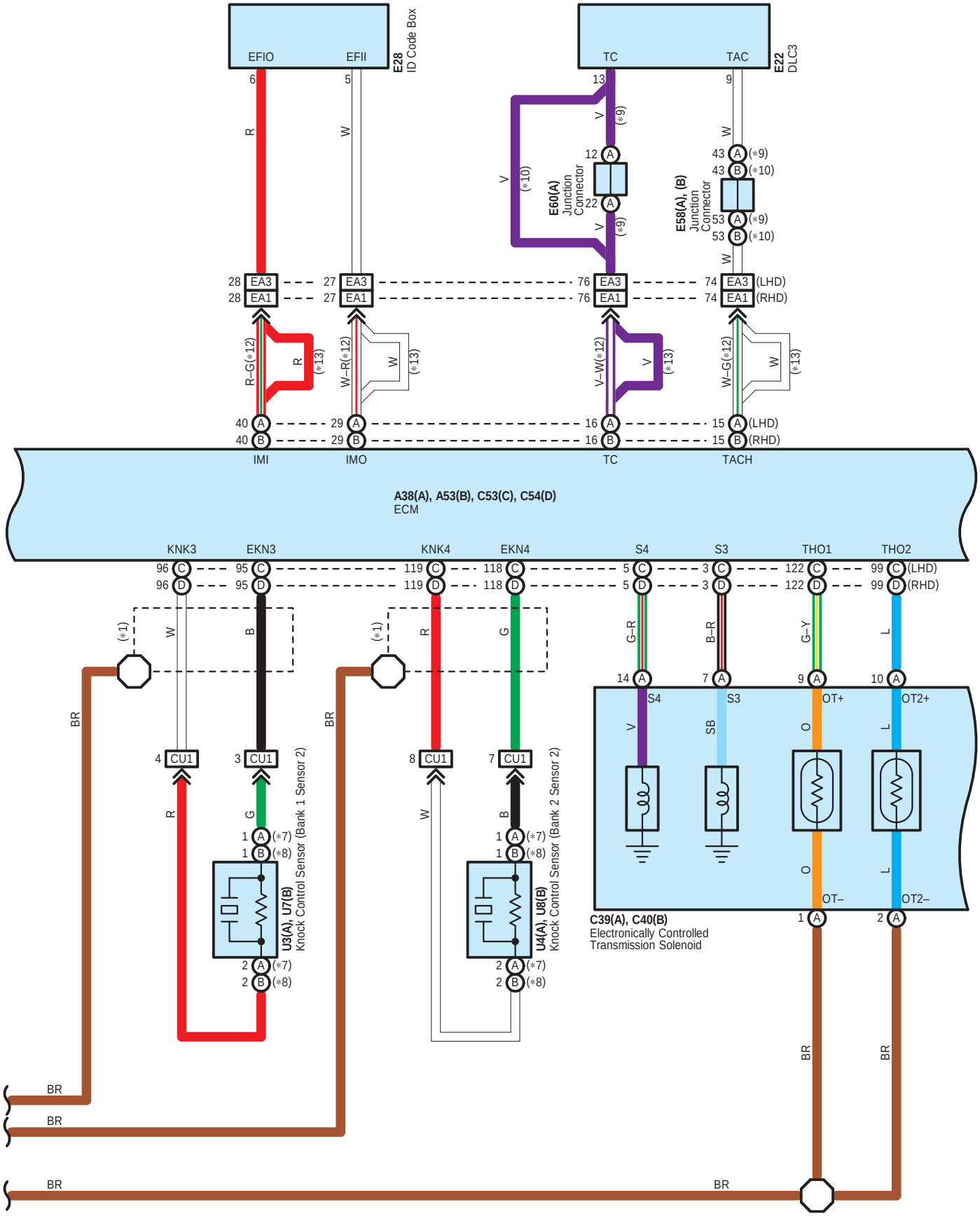
E28
ID Code Box
EFIO
EFII
E22
DLC3
TC
TAC
E60(A)
Junction
Connector
E58(A), (B)
Junction
Connector
EA3
EA1
(LHD)
(RHD)
IMI
IMO
TC
TACH
A38(A), A53(B), C53(C), C54(D)
ECM
KNK3
EKN3
KNK4
EKN4
S4
S3
THO1
THO2
CU1
U3(A), U7(B)
Knock Control Sensor (Bank 1 Sensor 2)
U4(A), U8(B)
Knock Control Sensor (Bank 2 Sensor 2)
OT+
OT2+
OT–
OT2–
C39(A), C40(B)
Electronically Controlled
Transmission Solenoid
BR

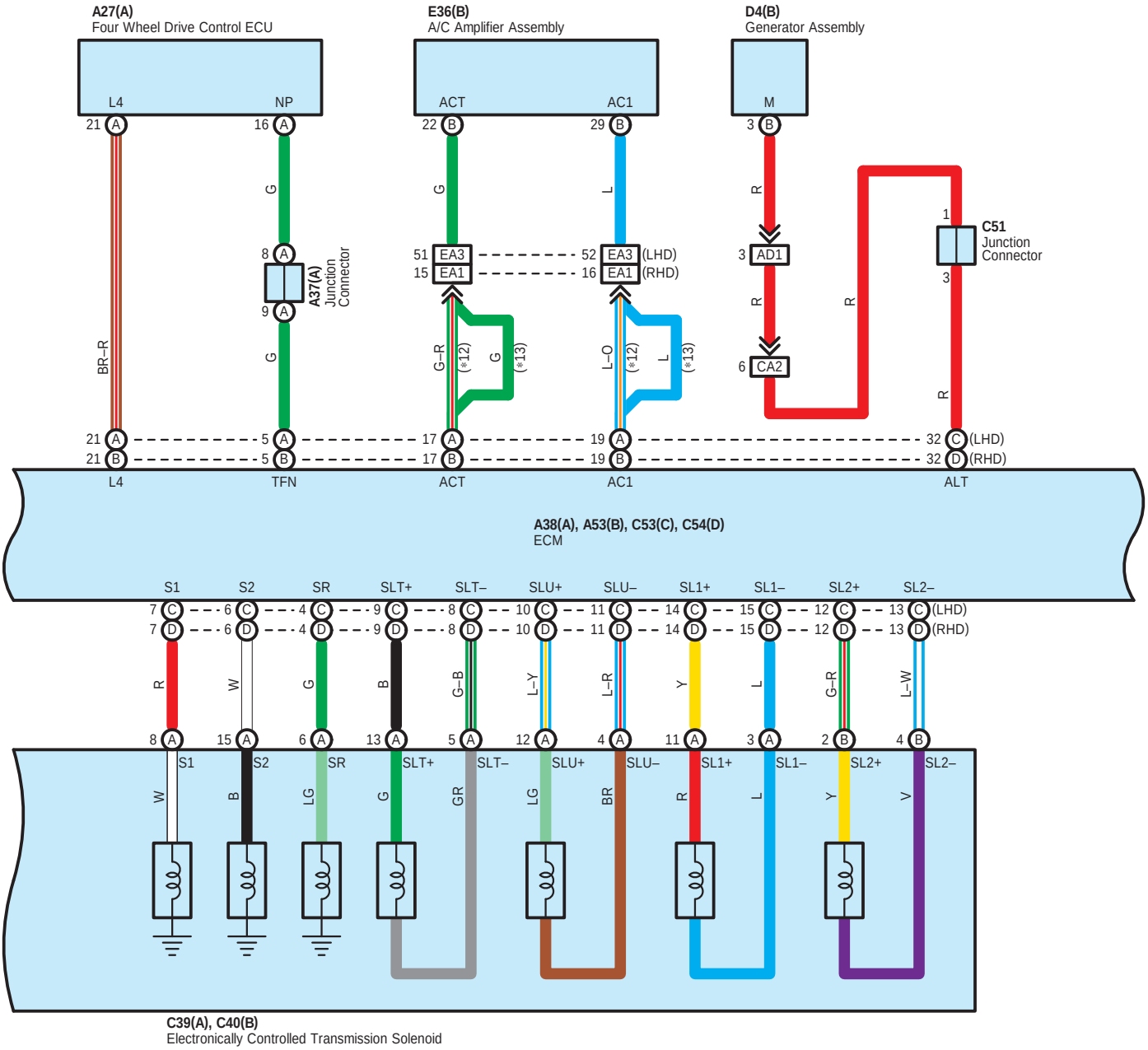

∗ 1 : Shielded
∗ 7 : Before Aug. 2010 Production
∗ 8 : From Aug. 2010 Production
∗ 9 : Before Jan. 2012 Production
∗10 : From Jan. 2012 Production
∗12 : Before Jan. 2013 Production
∗13 : From Jan. 2013 Production

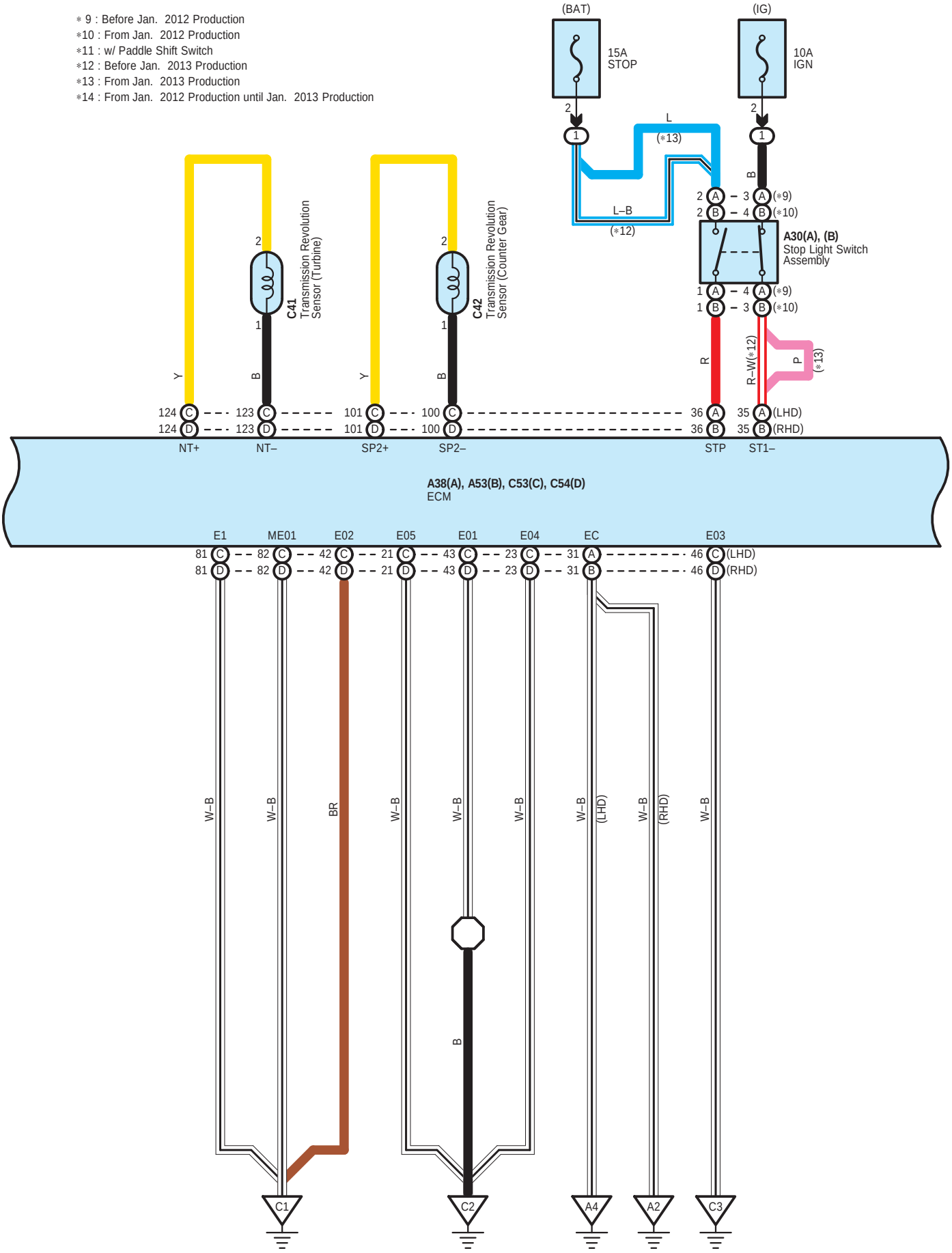
∗ 9 : Before Jan. 2012 Production
∗10 : From Jan. 2012 Production
∗11 : w/ Paddle Shift Switch
∗12 : Before Jan. 2013 Production
∗13 : From Jan. 2013 Production
∗14 : From Jan. 2012 Production until Jan. 2013 Production
(BAT)
15A
STOP
(IG)
10A
IGN
L
(∗13)
L–B
(∗12)
B
A30(A), (B)
Stop Light Switch
Assembly
C41
Transmission Revolution
Sensor (Turbine)
C42
Transmission Revolution
Sensor (Counter Gear)
Y
R
R–W(∗12)
P
(∗13)
124 C 124 D NT+
123 C 123 D NT–
101 C 101 D SP2+
100 C 100 D SP2–
36 A 36 B STP
35 A (LHD) 35 B (RHD) ST1–
A38(A), A53(B), C53(C), C54(D)
ECM
E1 ME01 E02 E05 E01 E04 EC E03
81 C 81 D
82 C 82 D
42 C 42 D
21 C 21 D
43 C 43 D
23 C 23 D
31 A 31 B
46 C (LHD) 46 D (RHD)
W–B
BR
(LHD)
(RHD)
C1
C2
A4
A2
C3

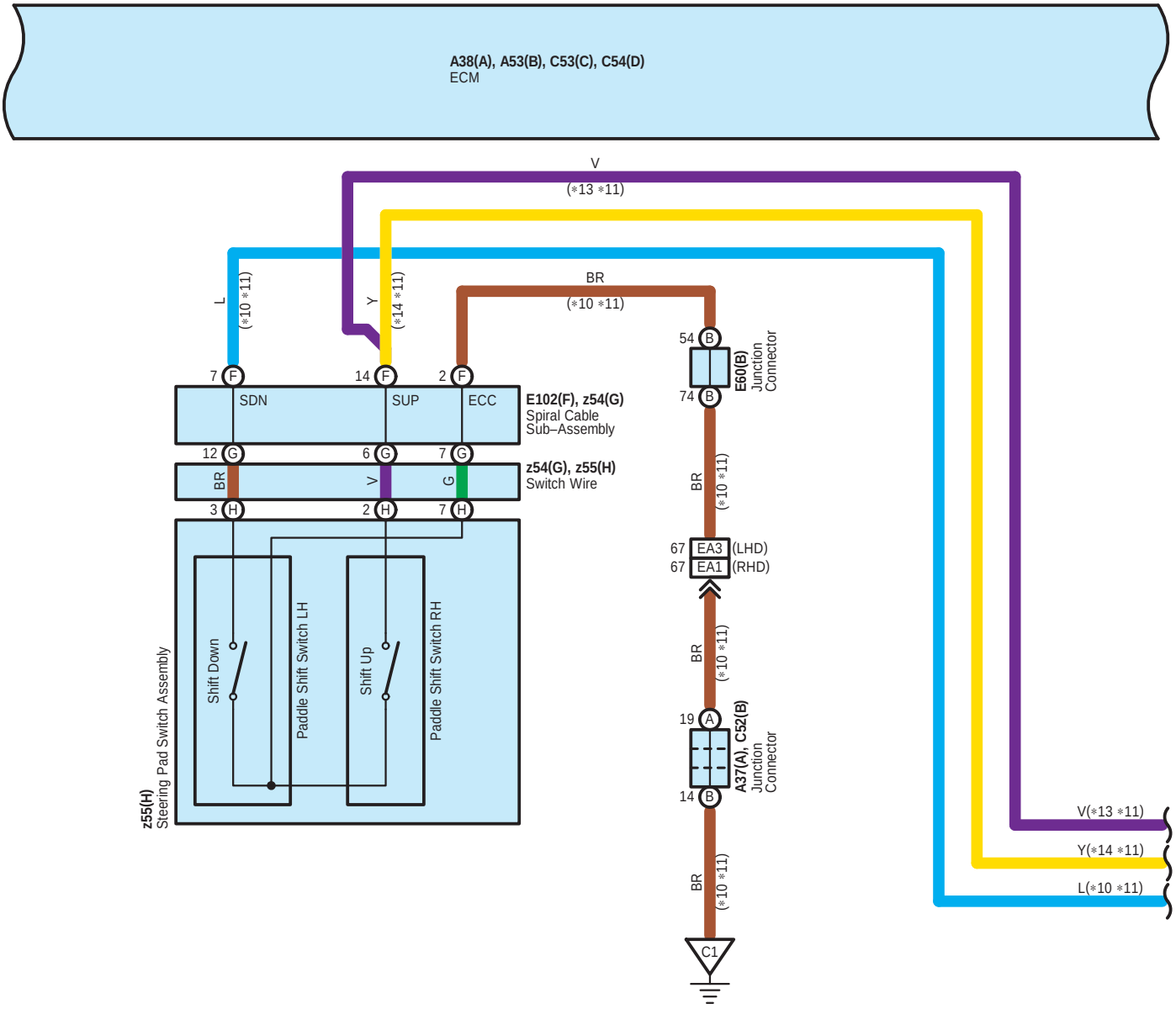
A38(A), A53(B), C53(C), C54(D)
ECM
V
(*13 *11)
L
(*10 *11)
Y
(*14 *11)
BR
(*10 *11)
7 F
14 F
2 F
SDN
SUP
ECC
E102(F), z54(G)
Spiral Cable
Sub–Assembly
12 G
6 G
7 G
BR
V
G
z54(G), z55(H)
Switch Wire
3 H
2 H
7 H
Shift Down
Paddle Shift Switch LH
Shift Up
Paddle Shift Switch RH
z55(H)
Steering Pad Switch Assembly
54 B
74 B
E60(B)
Junction
Connector
BR
(*10 *11)
67 EA3 (LHD)
67 EA1 (RHD)
BR
(*10 *11)
19 A
14 B
A37(A), C52(B)
Junction
Connector
BR
(*10 *11)
C1
V(*13 *11)
Y(*14 *11)
L(*10 *11)

∗ 3 : Before Jul. 2009 Production
∗ 4 : From Jul. 2009 Production
∗ 9 : Before Jan. 2012 Production
∗10 : From Jan. 2012 Production
∗11 : w/ Paddle Shift Switch
∗12 : Before Jan. 2013 Production
∗13 : From Jan. 2013 Production
∗14 : From Jan. 2012 Production until Jan. 2013 Production

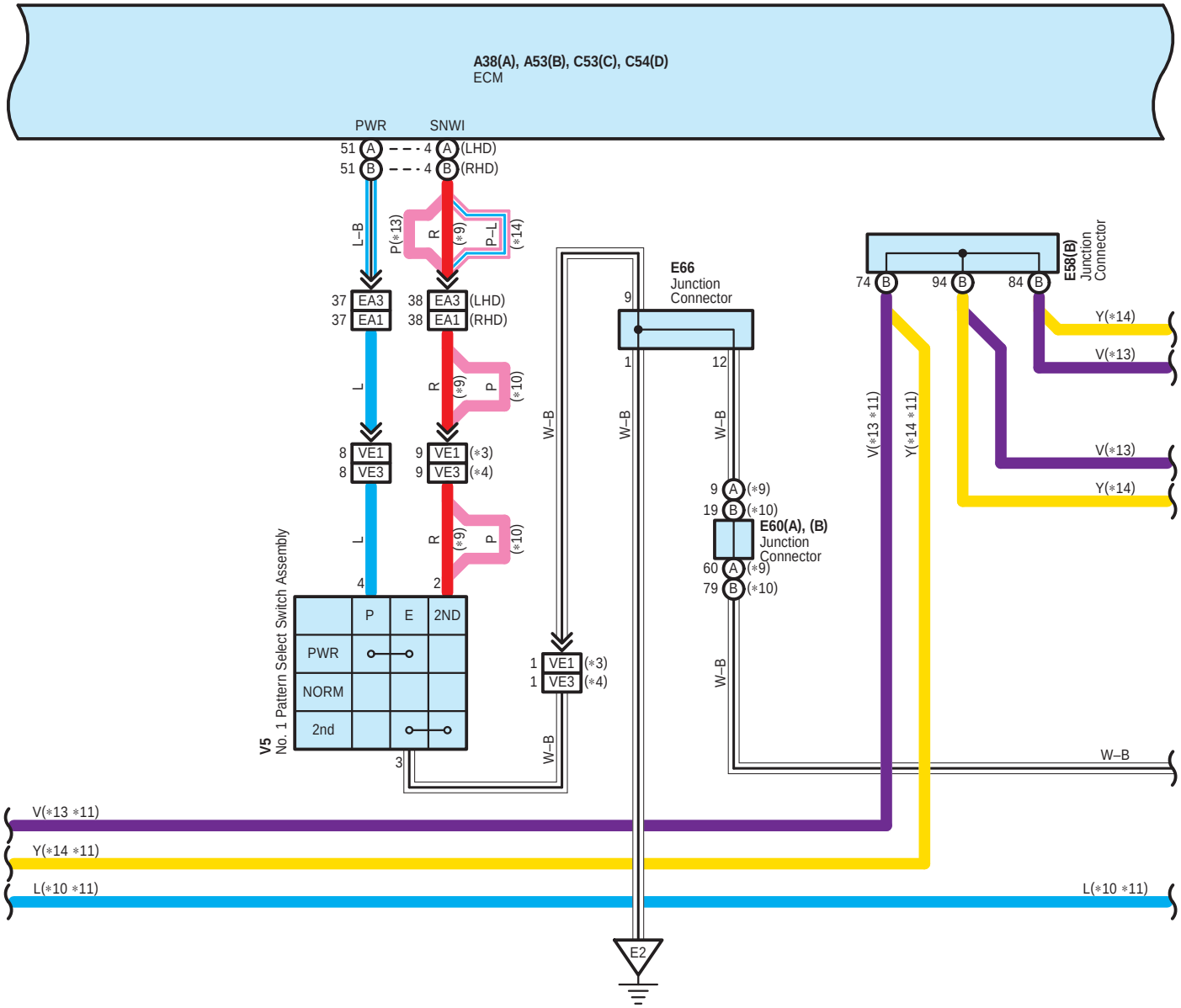

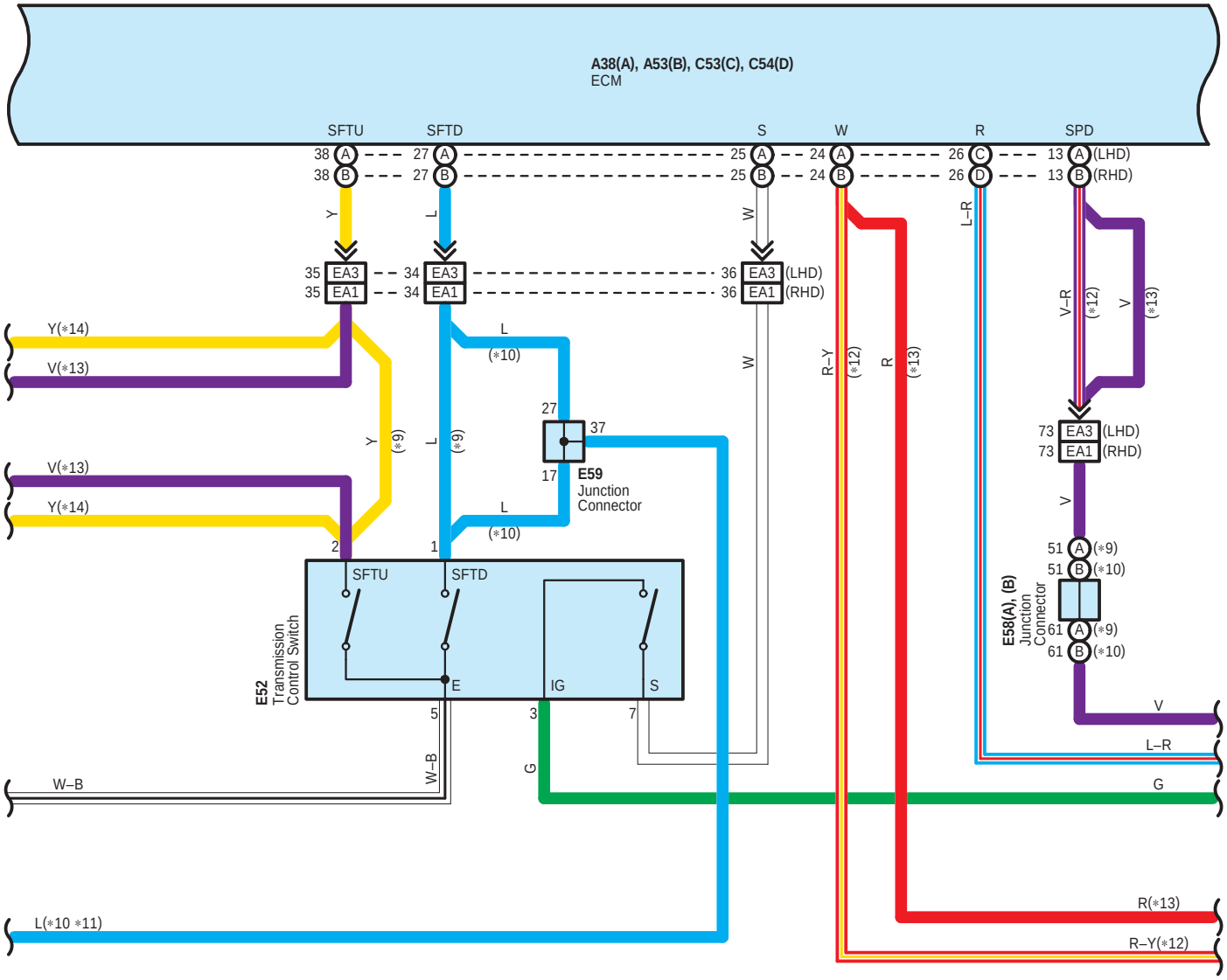
A38(A), A53(B), C53(C), C54(D)
ECM
SFTU
SFTD
S
W
R
SPD
38 A
38 B
27 A
27 B
25 A
25 B
24 A
24 B
26 C
26 D
13 A (LHD)
13 B (RHD)
Y
L
W
L–R
35 EA3
35 EA1
34 EA3
34 EA1
36 EA3 (LHD)
36 EA1 (RHD)
V–R
(∗12)
V
(∗13)
Y(∗14)
V(∗13)
L
(∗10)
27
37
17
E59
Junction
Connector
Y
(∗9)
L
(∗9)
W
R–Y
(∗12)
R
(∗13)
73 EA3 (LHD)
73 EA1 (RHD)
V(∗13)
Y(∗14)
2
1
SFTU
SFTD
E52
Transmission
Control Switch
E
IG
S
5
3
7
51 A (∗9)
51 B (∗10)
E58(A), (B)
Junction
Connector
61 A (∗9)
61 B (∗10)
V
L–R
G
W–B
W–B
G
R(∗13)
L(∗10 ∗11)
R–Y(∗12)

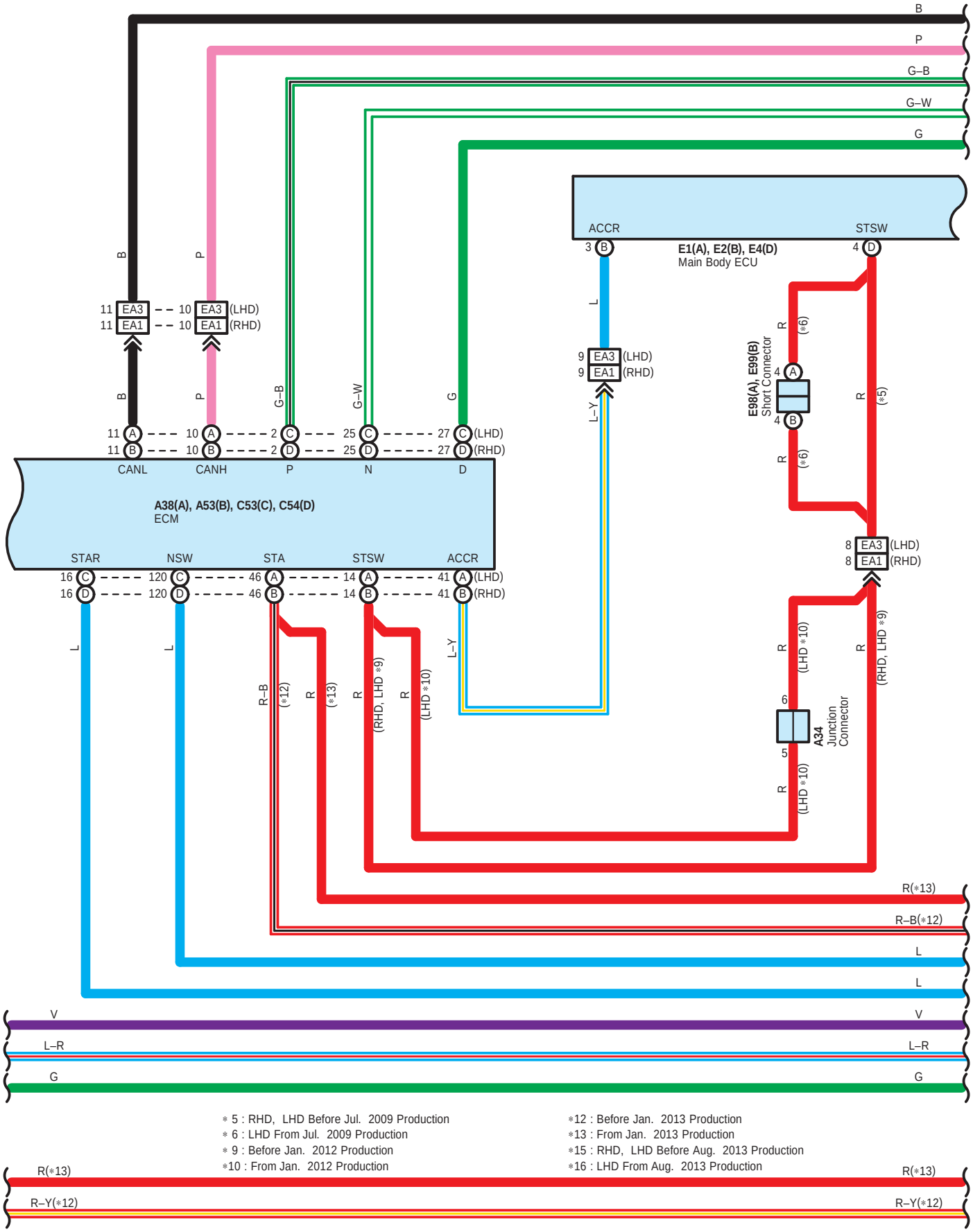

* 5 : RHD, LHD Before Jul. 2009 Production
* 6 : LHD From Jul. 2009 Production
* 9 : Before Jan. 2012 Production
*10 : From Jan. 2012 Production
*12 : Before Jan. 2013 Production
*13 : From Jan. 2013 Production
*15 : RHD, LHD Before Aug. 2013 Production
*16 : LHD From Aug. 2013 Production

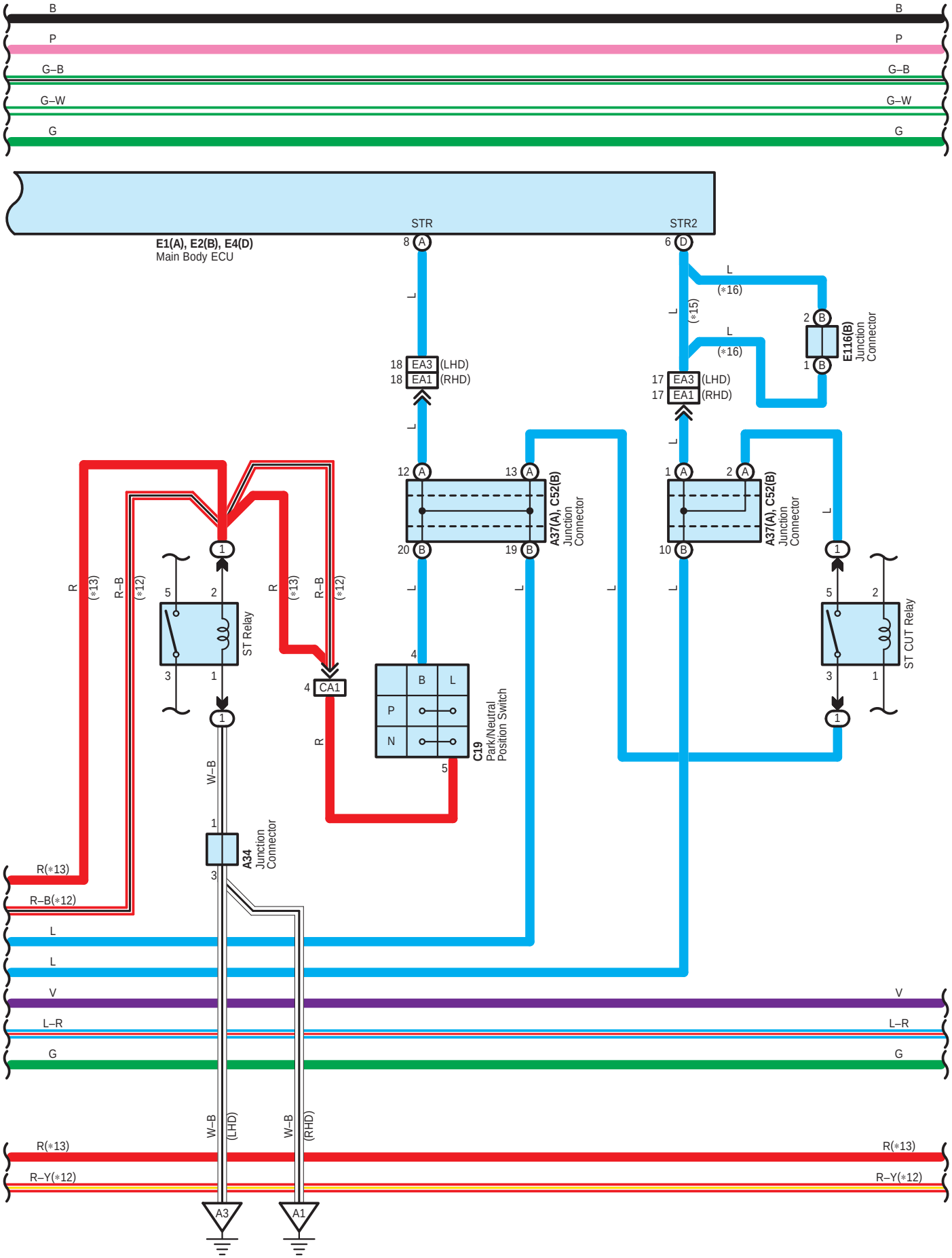
B
P
G–B
G–W
G
E1(A), E2(B), E4(D)
Main Body ECU
STR
STR2
8 A
6 D
L
(*16)
(*15)
2 B
1 B
E116(B)
Junction
Connector
18 EA3 (LHD)
18 EA1 (RHD)
17 EA3 (LHD)
17 EA1 (RHD)
12 A
13 A
20 B
19 B
A37(A), C52(B)
Junction
Connector
1 A
2 A
10 B
R
(*13)
R–B
(*12)
ST Relay
ST CUT Relay
4 CA1
4
B
L
P
N
5
C19
Park/Neutral
Position Switch
W–B
A34
Junction
Connector
R(*13)
R–B(*12)
V
L–R
(LHD)
(RHD)
R–Y(*12)
A3
A1

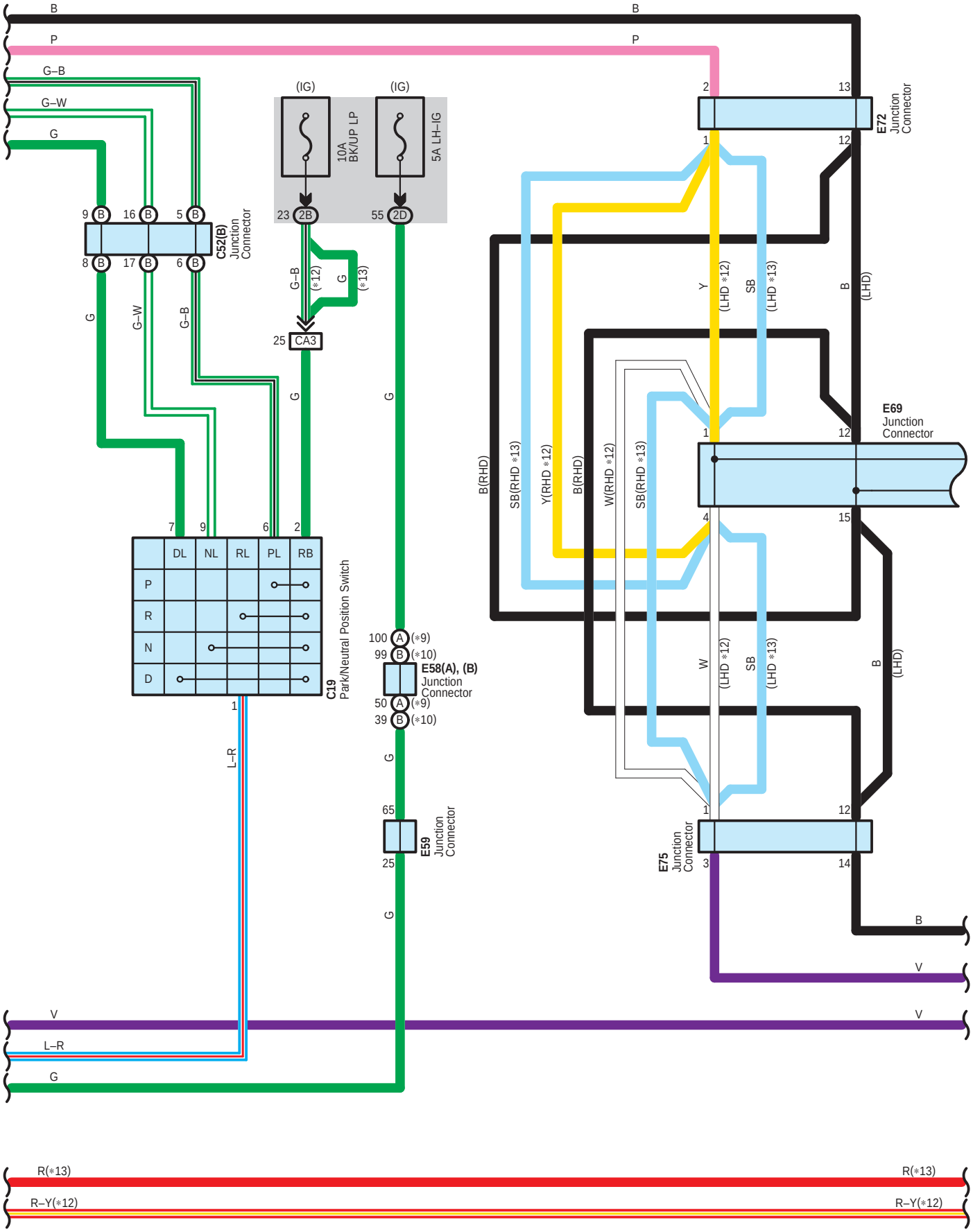
B
P
G–B
G–W
G
(IG)
10A BK/UP LP
5A LH–IG
23 2B
55 2D
25 CA3
C52(B) Junction Connector
9 B 16 B 5 B
8 B 17 B 6 B
G–B (*12)
G (*13)
C19 Park/Neutral Position Switch
DL NL RL PL RB
P
R
N
D
L–R
100 A (*9)
99 B (*10)
E58(A), (B) Junction Connector
50 A (*9)
39 B (*10)
E59 Junction Connector
65
25
E72 Junction Connector
E69 Junction Connector
E75 Junction Connector
B(RHD)
SB(RHD *13)
Y(RHD *12)
W(RHD *12)
Y (LHD *12)
SB (LHD *13)
B (LHD)
W (LHD *12)
V
R(*13)
R–Y(*12)

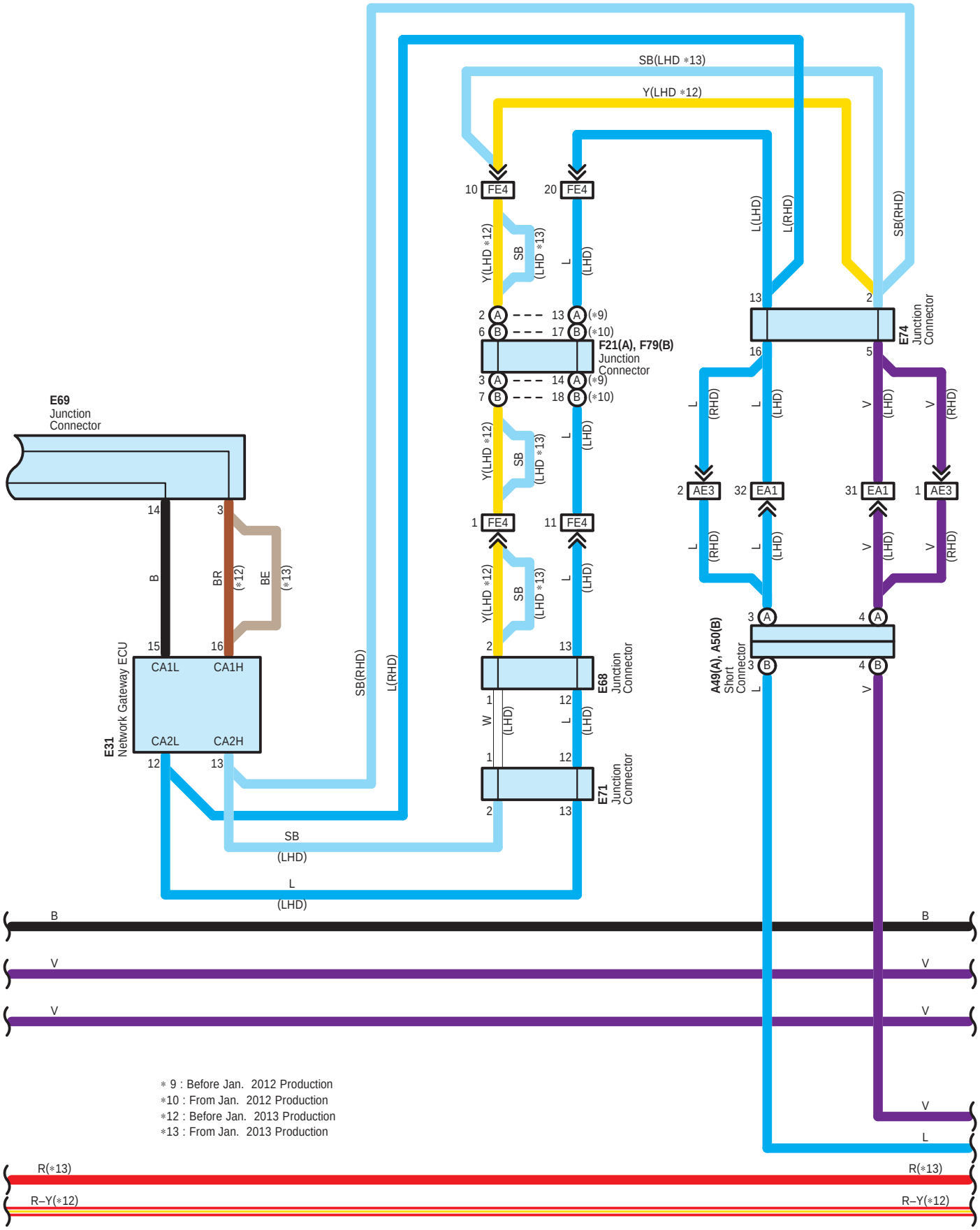
SB(LHD *13)
Y(LHD *12)
10 FE4
20 FE4
Y(LHD *12)
SB
(LHD *13)
L
(LHD)
L(LHD)
L(RHD)
SB(RHD)
2 A
6 B
13 A (*9)
17 B (*10)
F21(A), F79(B)
Junction
Connector
3 A
7 B
14 A (*9)
18 B (*10)
13
2
16
5
E74
Junction
Connector
L
(RHD)
V
(LHD)
2 AE3
32 EA1
31 EA1
1 AE3
1 FE4
11 FE4
E69
Junction
Connector
14
3
B
BR
(*12)
BE
(*13)
15
16
CA1L
CA1H
CA2L
CA2H
12
13
E31
Network Gateway ECU
SB(RHD)
L(RHD)
2
13
E68
Junction
Connector
1
12
W
(LHD)
E71
Junction
Connector
3 A
4 A
3 B
4 B
A49(A), A50(B)
Short
Connector
SB
(LHD)
L
(LHD)
B
V
V
V
V
L
R(*13)
R–Y(*12)
* 9 : Before Jan. 2012 Production
*10 : From Jan. 2012 Production
*12 : Before Jan. 2013 Production
*13 : From Jan. 2013 Production

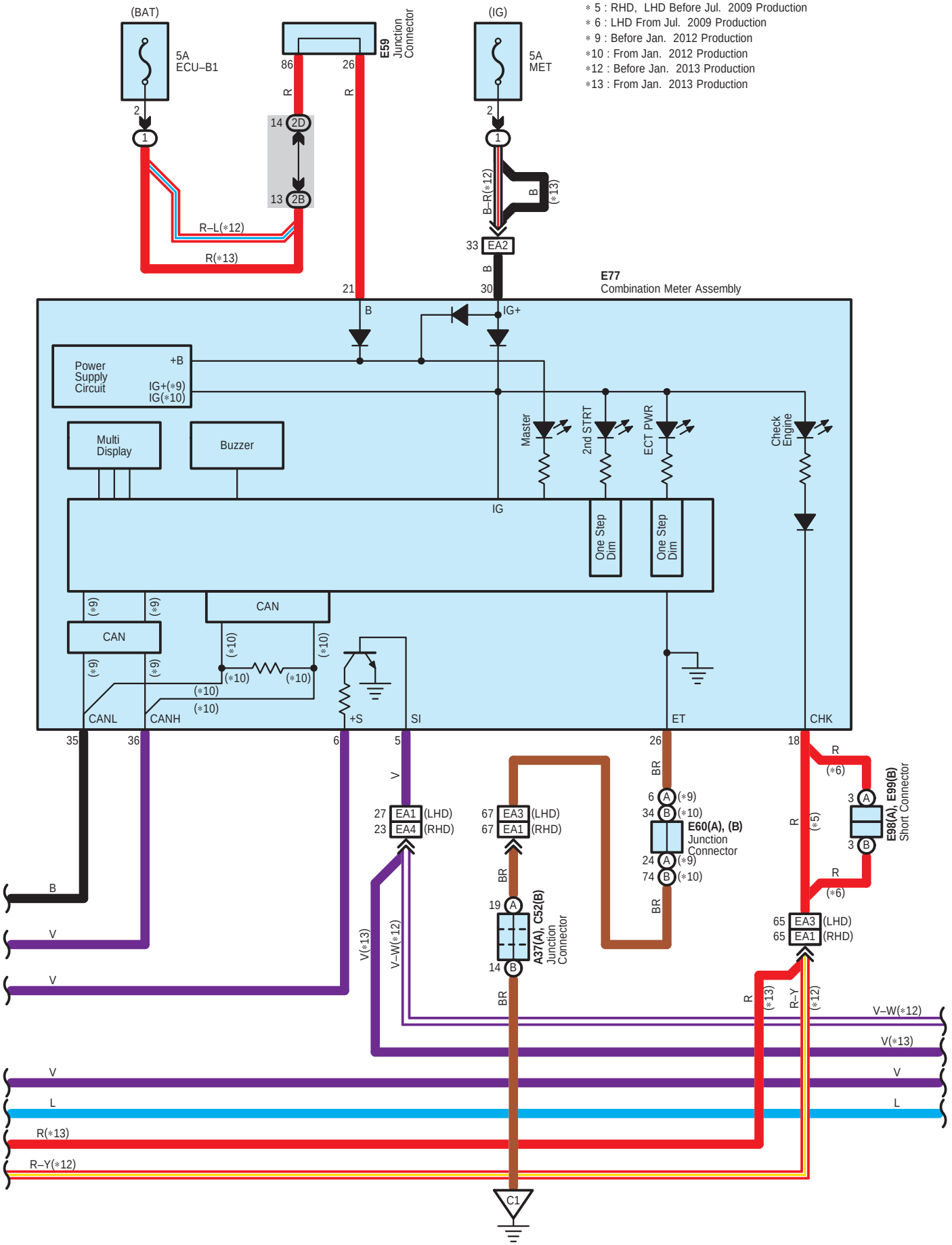
(BAT)
5A
ECU–B1
E59
Junction
Connector
(IG)
5A
MET
∗ 5 : RHD, LHD Before Jul. 2009 Production
∗ 6 : LHD From Jul. 2009 Production
∗ 9 : Before Jan. 2012 Production
∗10 : From Jan. 2012 Production
∗12 : Before Jan. 2013 Production
∗13 : From Jan. 2013 Production
R–L(∗12)
R(∗13)
B–R(∗12)
B
(∗13)
EA2
E77
Combination Meter Assembly
Power
Supply
Circuit
+B
IG+(∗9)
IG(∗10)
Multi
Display
Buzzer
Master
2nd STRT
ECT PWR
Check
Engine
IG
One Step
Dim
CAN
CANL
CANH
+S
SI
ET
CHK
EA1 (LHD)
EA4 (RHD)
EA3 (LHD)
EA1 (RHD)
E60(A), (B)
Junction
Connector
A37(A), C52(B)
Junction
Connector
E98(A), E99(B)
Short Connector
V(∗13)
V–W(∗12)
R–Y(∗12)
C1

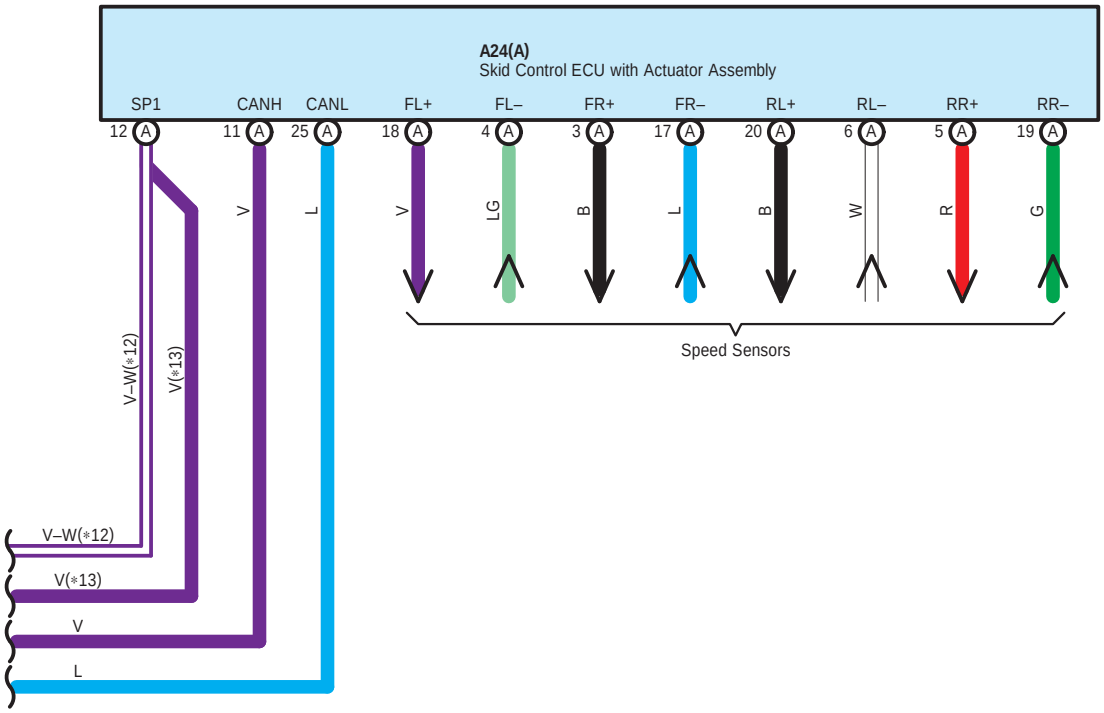
A24(A)
Skid Control ECU with Actuator Assembly
SP1
CANH
CANL
FL+
FL–
FR+
FR–
RL+
RL–
RR+
RR–
12 A
11 A
25 A
18 A
4 A
3 A
17 A
20 A
6 A
5 A
19 A
V
L
V
LG
B
L
B
W
R
G
Speed Sensors
V–W(∗12)
V(∗13)
V–W(∗12)
V(∗13)
V
L

A 24
Black

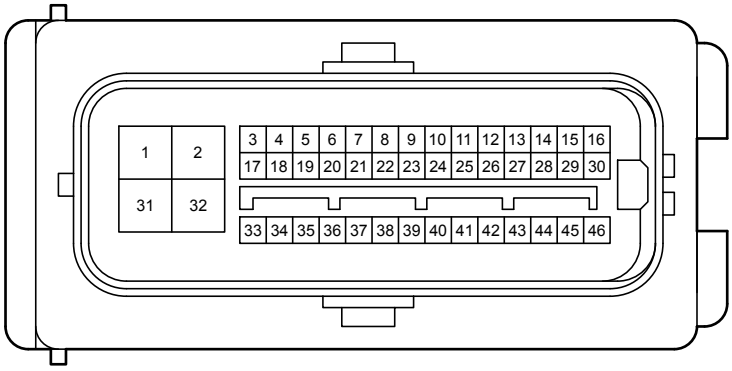

A 27
Black

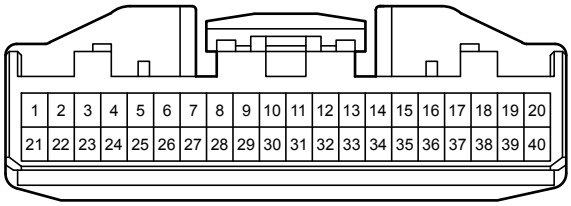

A 30
Gray

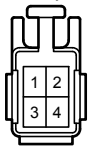

A 31
Black

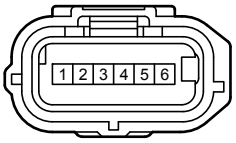

A 34
White

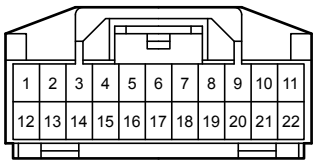

A 37
Blue

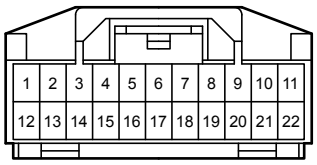

A 38
Black

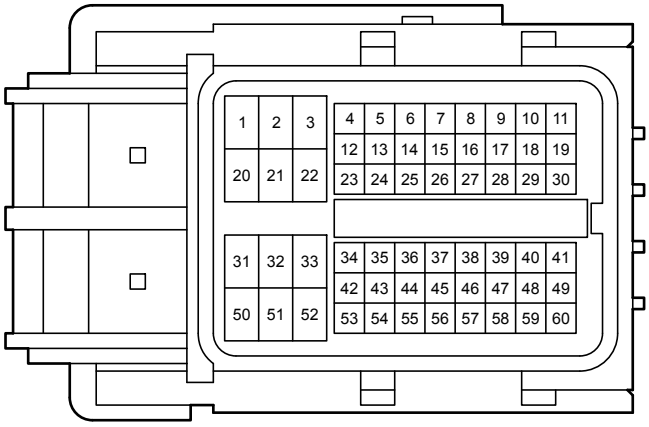

A 49
Gray

A 50
Gray

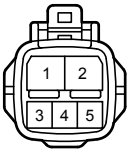

A 53
Black

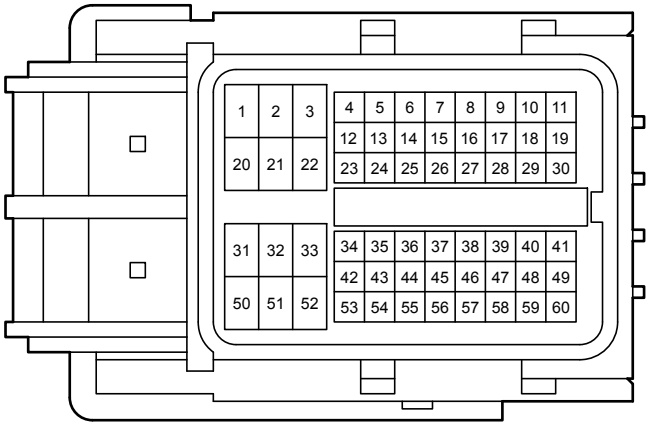

C 1
Black

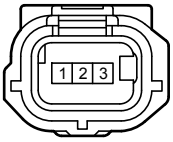

C 2
Black

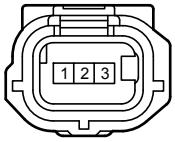

C 3
Black

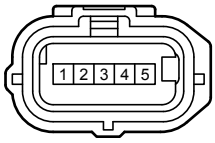

C 4
Black

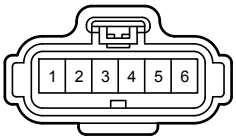

C 15
Dark Gray

C 16
Black

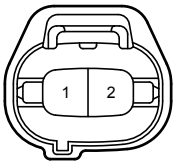

C 17
Dark Gray

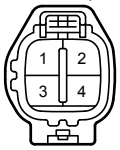

C 18
Dark Gray

C 19
Gray

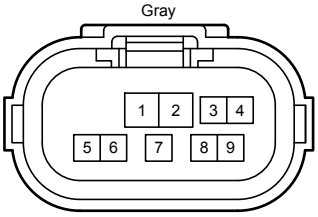

C 20
Black

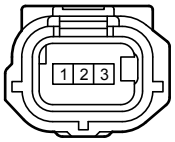

C 21
Black

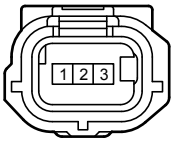

C 22
Black

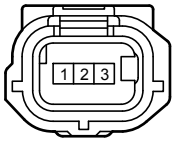

C 23
Black

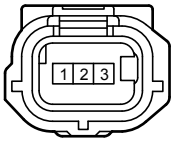

C 24
Black

C 25
Black

C 26
Black

C 27
Black

C 28
Gray

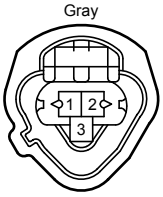

C 29
Black

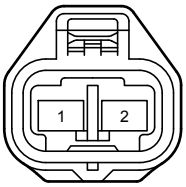

C 30
Black

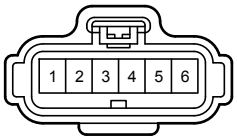

C 31
Gray

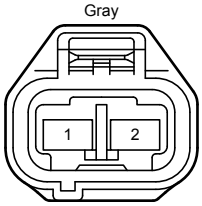

C 32
Gray

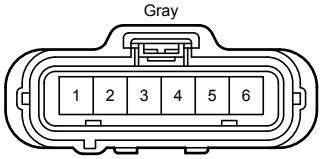

C 33
Gray

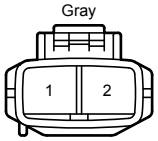

C 34
Gray

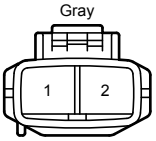

C 35
Black

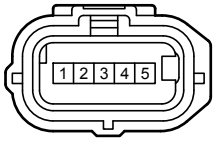

C 36
Black

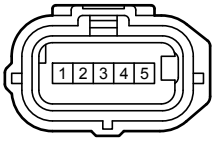

C 38
Black

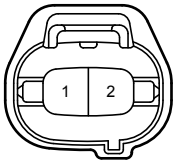

C 39
Gray

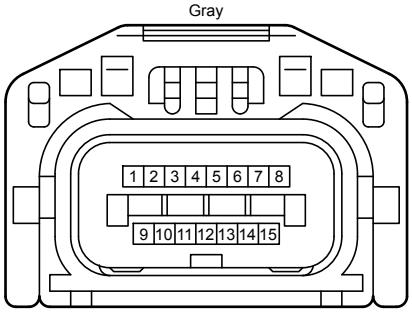

C 40
Gray

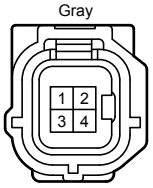

C 41
Black

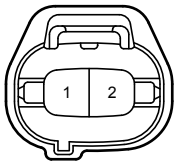

C 42
Black

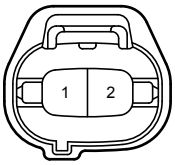

C 47
Dark Gray

C 48
Dark Gray

C 50
White

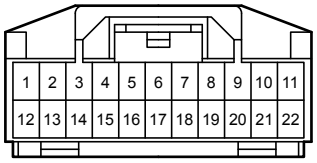

C 51
White

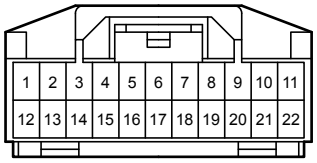

C 52
Blue

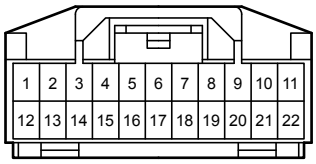

C 53
Black

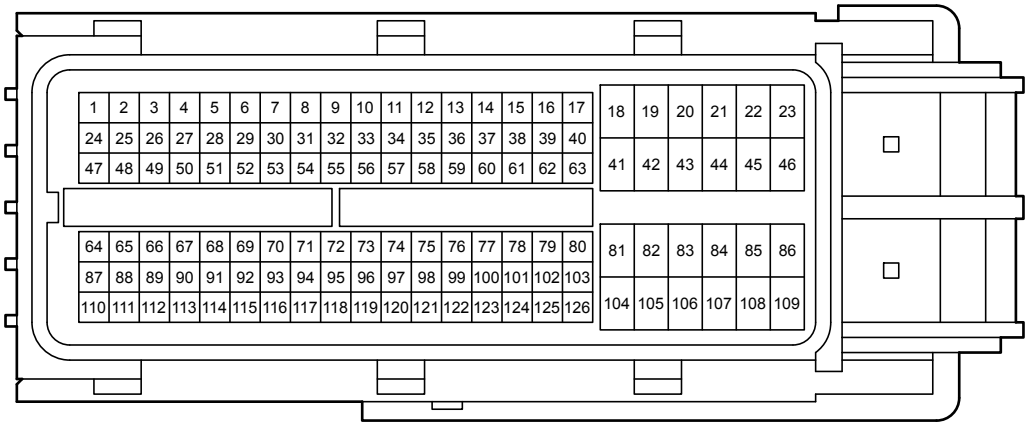

C 54
Black

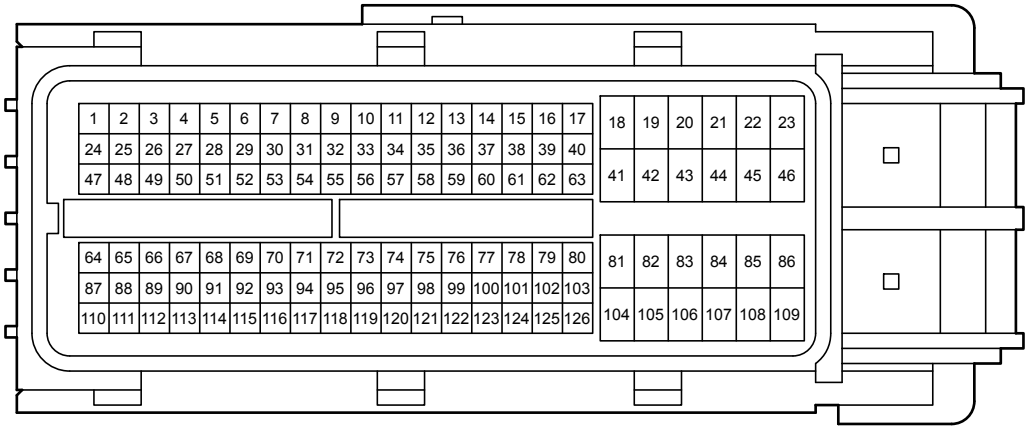

D 4
Black

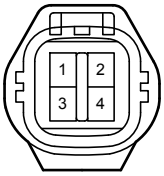

E 1
White

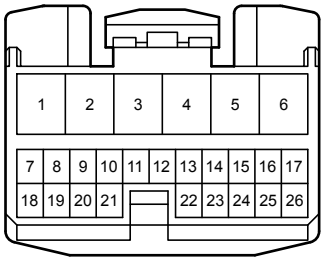

E 2
White

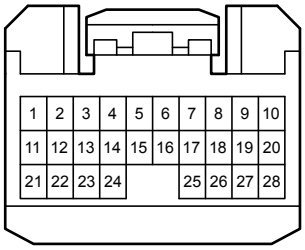

E 4
White

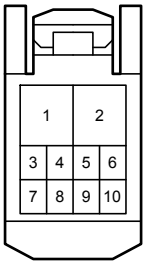

E 22
White

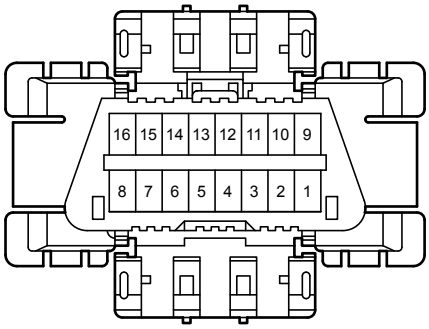

E 28
White

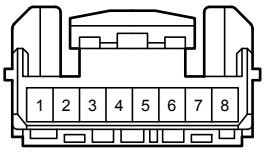

E 31
White

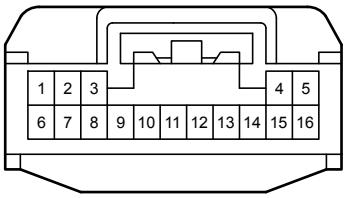

E 36

White

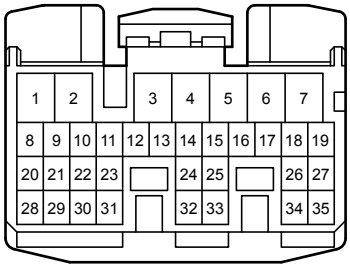

E 52

White

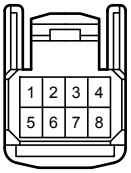

E 58

White

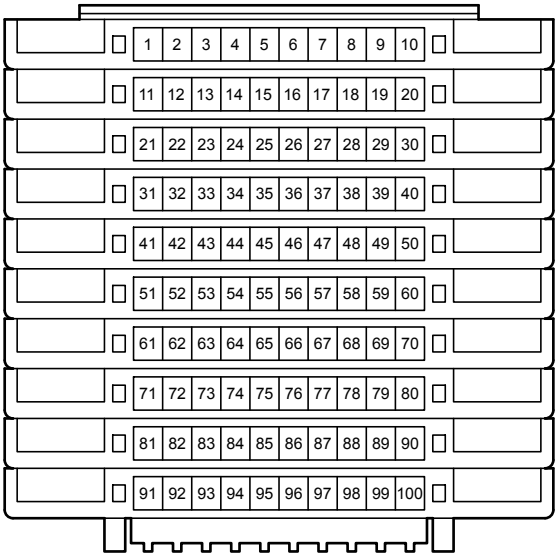

E 59

White

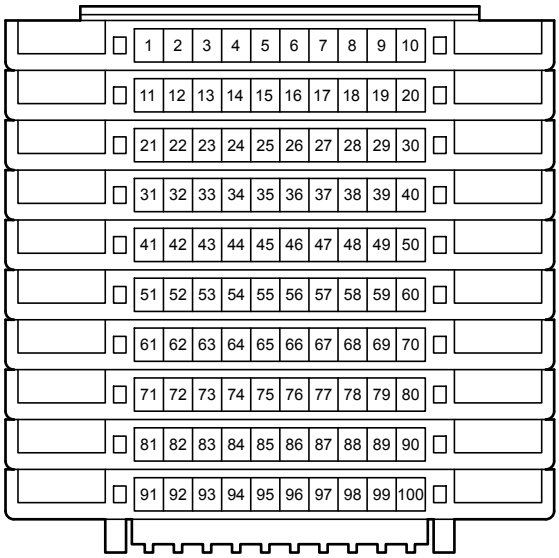

E 60

White

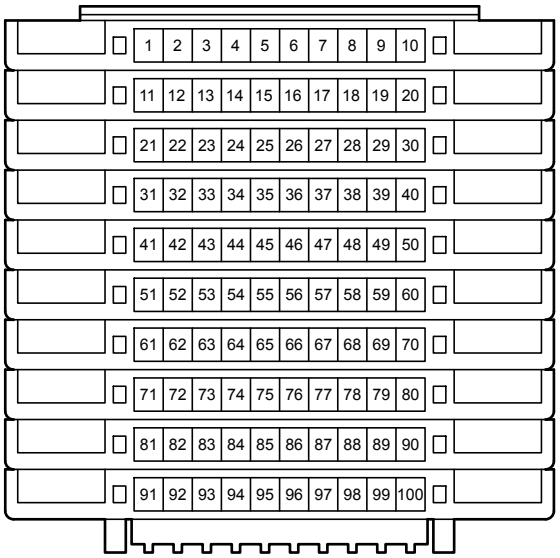

E 66

White

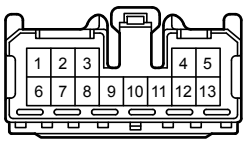

E 68

Gray

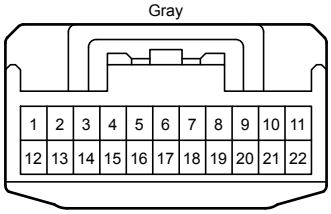

E 69

Gray

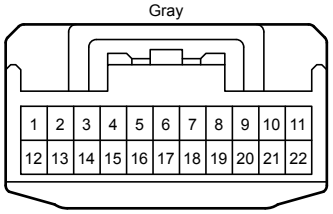

E 71

Gray

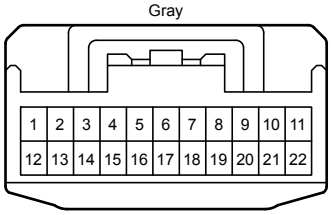

E 72

Gray

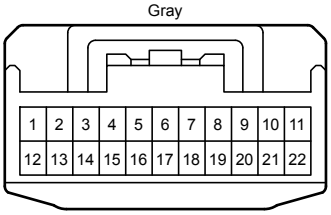

E 74

Gray

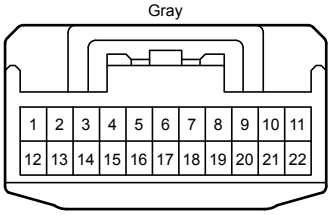

E 75
Gray

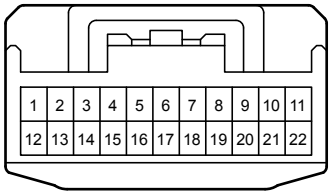

E 77
White

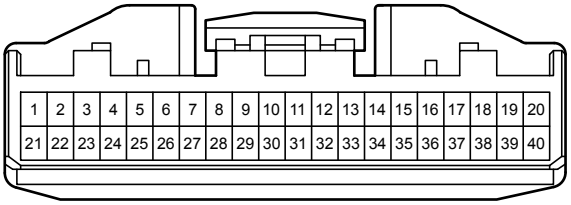

E 98
White

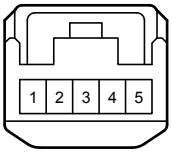

E 99
White

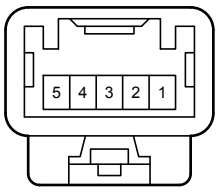

E102
Black

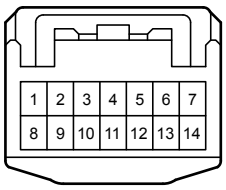

E116
White

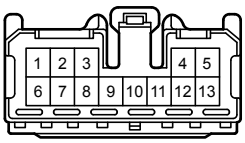

F 21
Black

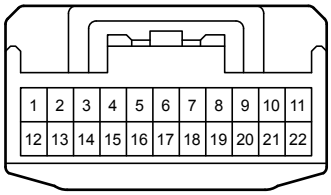

F 79
White

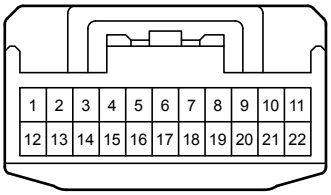

N 1
White

N 2
Gray

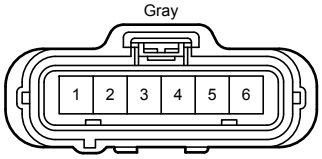

N 12
Black

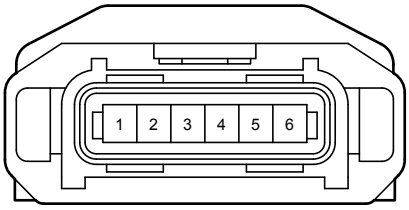

U 1
Black

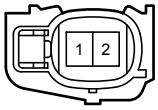

U 2
Gray

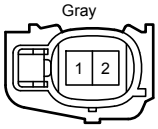

U 3
Black

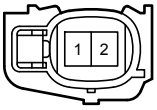

U 4
Gray

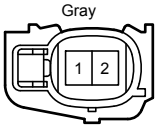

U 5
Gray

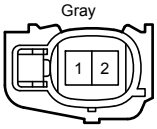

U 6
Black

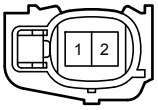

U 7
Gray

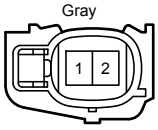

U 8
Black

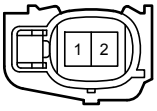

V 5
Black

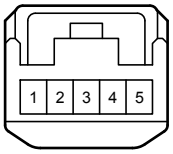

a 1
Black

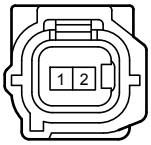

a 2
Black

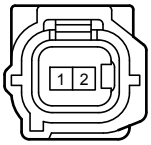

a 3
Black

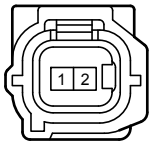

a 4
Black

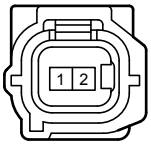

a 5
Black

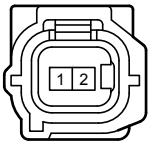

a 6
Black

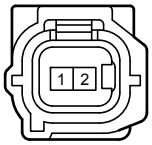

a 7
Black

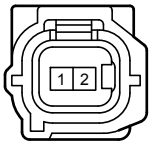

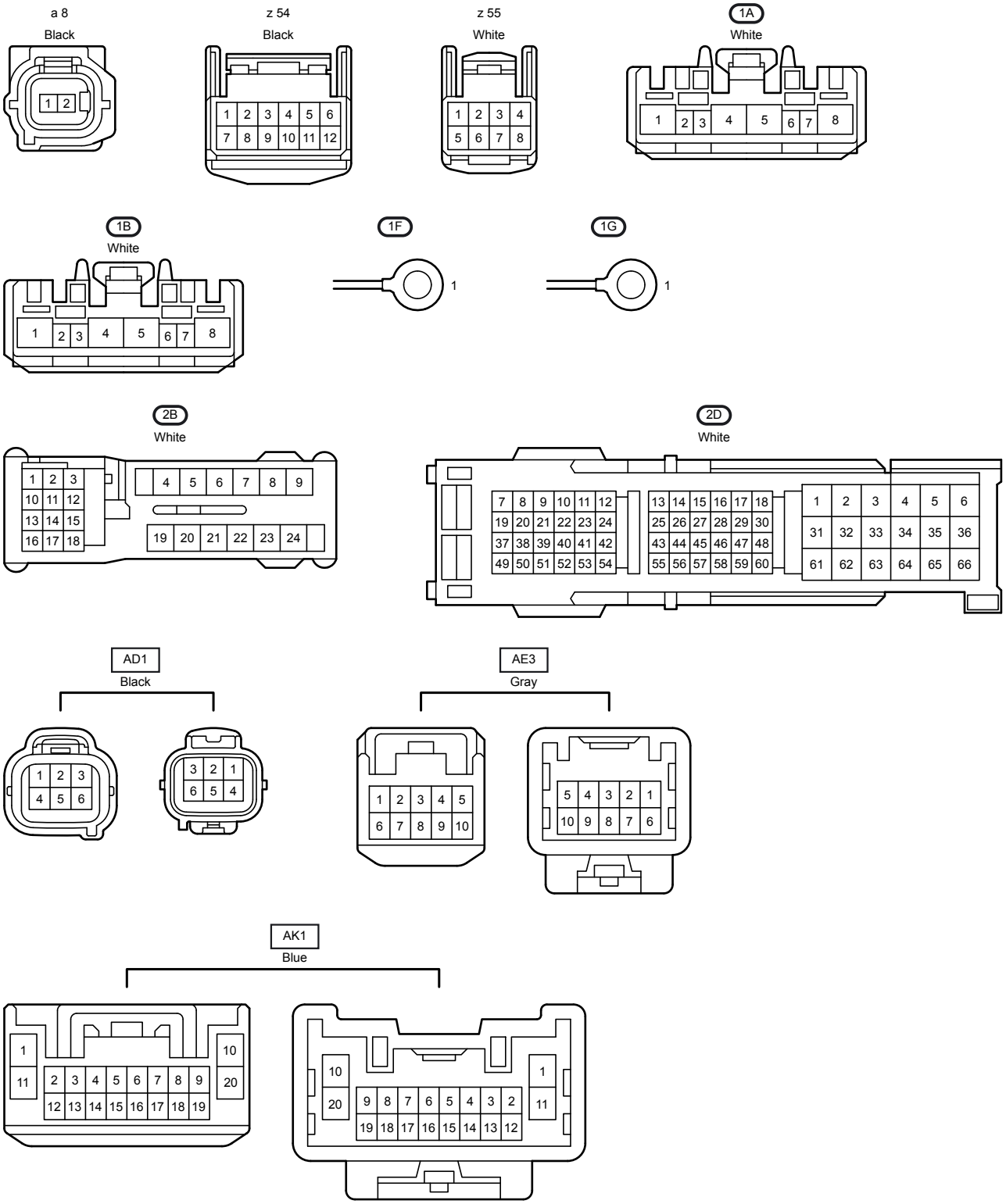
a 8
Black
1 2
z 54
Black
1 2 3 4 5 6
7 8 9 10 11 12
z 55
White
1 2 3 4
5 6 7 8
1A
White
1 2 3 4 5 6 7 8
1B
White
1 2 3 4 5 6 7 8
1F
1
1G
1
2B
White
1 2 3
10 11 12
13 14 15
16 17 18
4 5 6 7 8 9
19 20 21 22 23 24
2D
White
7 8 9 10 11 12
19 20 21 22 23 24
37 38 39 40 41 42
49 50 51 52 53 54
13 14 15 16 17 18
25 26 27 28 29 30
43 44 45 46 47 48
55 56 57 58 59 60
1 2 3 4 5 6
31 32 33 34 35 36
61 62 63 64 65 66
AD1
Black
1 2 3
4 5 6
3 2 1
6 5 4
AE3
Gray
1 2 3 4 5
6 7 8 9 10
5 4 3 2 1
10 9 8 7 6
AK1
Blue
1
11
2 3 4 5 6 7 8 9
12 13 14 15 16 17 18 19
10
20
10
20
9 8 7 6 5 4 3 2
19 18 17 16 15 14 13 12
1
11

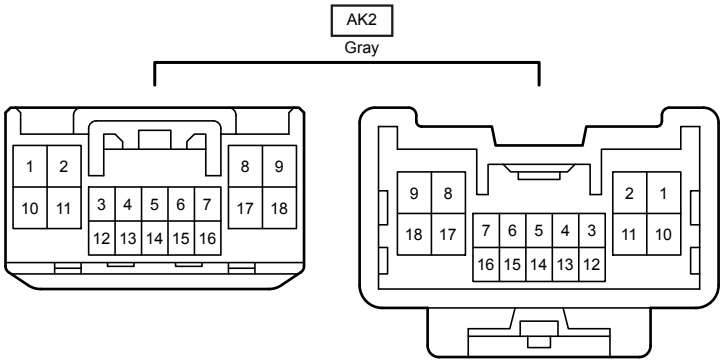
AK2
Gray
1 2 8 9
10 11 3 4 5 6 7 17 18
12 13 14 15 16
9 8 2 1
18 17 7 6 5 4 3 11 10
16 15 14 13 12

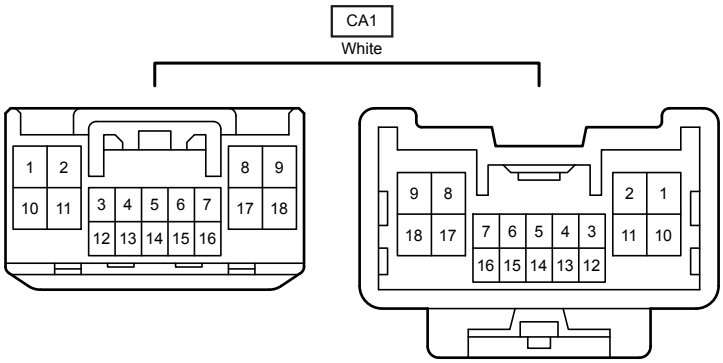
CA1
White
1 2 8 9
10 11 3 4 5 6 7 17 18
12 13 14 15 16
9 8 2 1
18 17 7 6 5 4 3 11 10
16 15 14 13 12

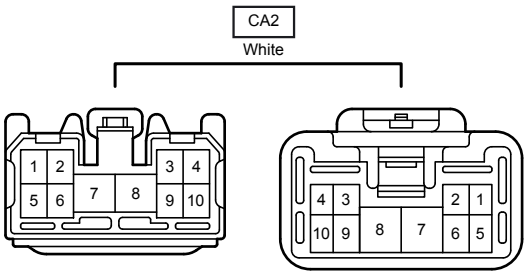
CA2
White
1 2 3 4
5 6 7 8 9 10
4 3 2 1
10 9 8 7 6 5

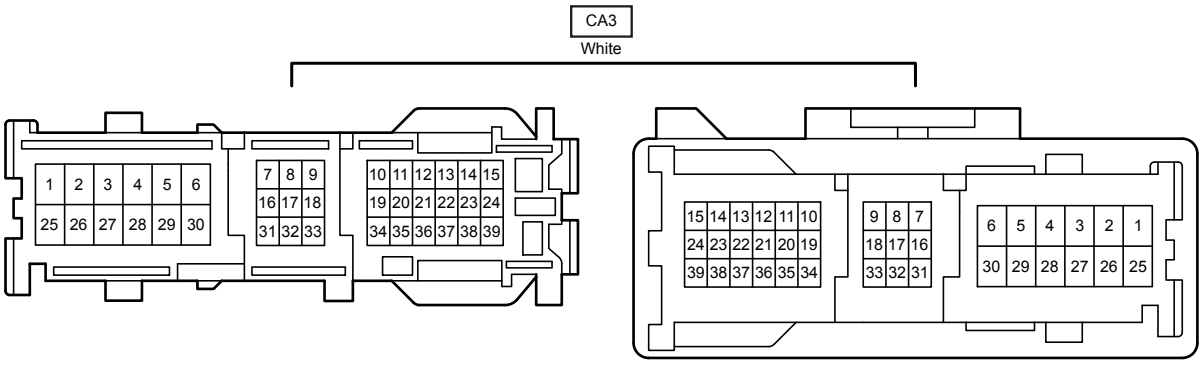
CA3
White
1 2 3 4 5 6
25 26 27 28 29 30
7 8 9
16 17 18
31 32 33
10 11 12 13 14 15
19 20 21 22 23 24
34 35 36 37 38 39
15 14 13 12 11 10
24 23 22 21 20 19
39 38 37 36 35 34
9 8 7
18 17 16
33 32 31
6 5 4 3 2 1
30 29 28 27 26 25

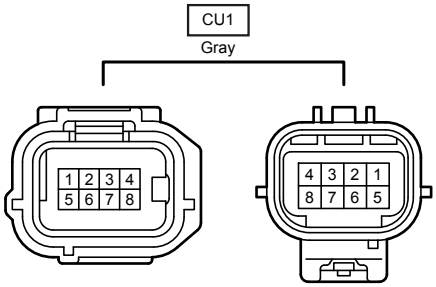
CU1
Gray
1 2 3 4
5 6 7 8
4 3 2 1
8 7 6 5

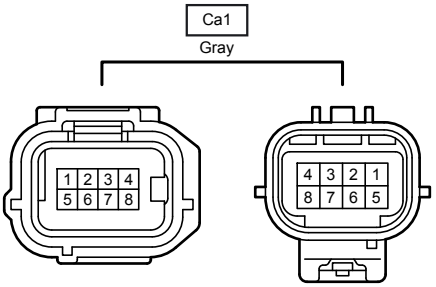
Ca1
Gray
1 2 3 4
5 6 7 8
4 3 2 1
8 7 6 5

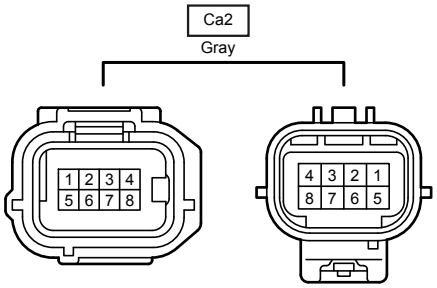
Ca2
Gray
1 2 3 4
5 6 7 8
4 3 2 1
8 7 6 5

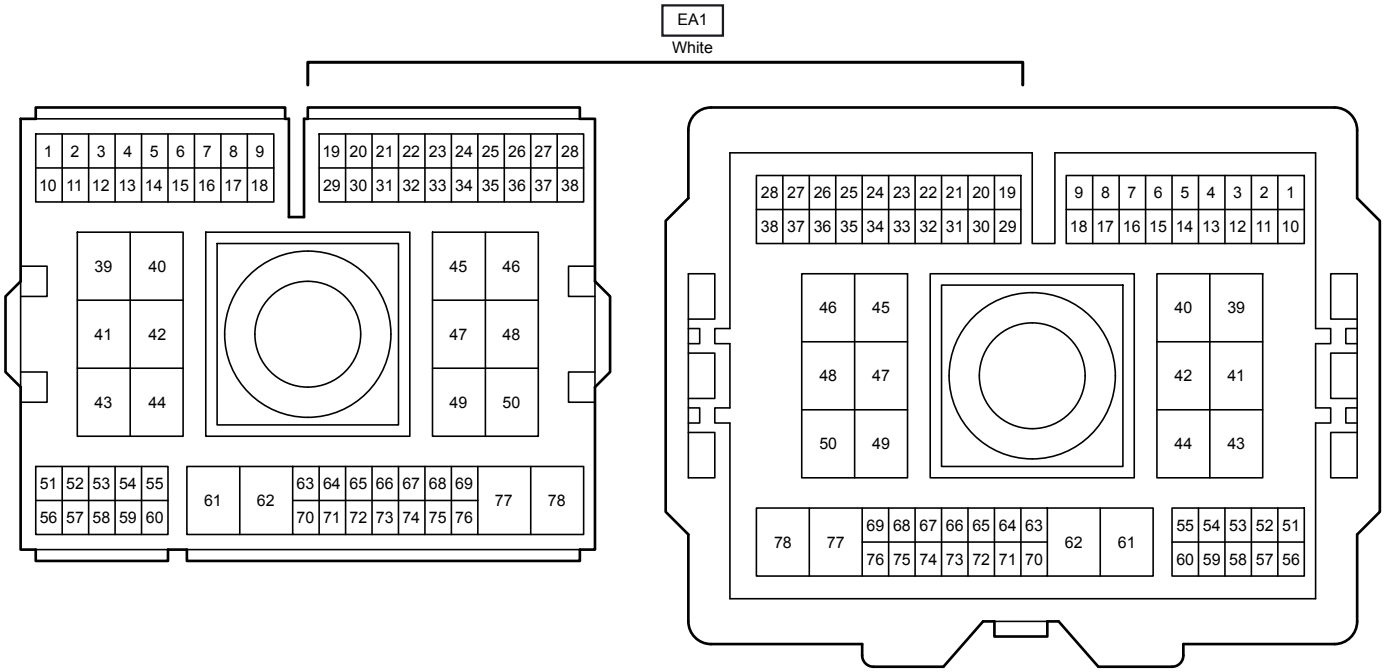
EA1
White
1 2 3 4 5 6 7 8 9
10 11 12 13 14 15 16 17 18
19 20 21 22 23 24 25 26 27 28
29 30 31 32 33 34 35 36 37 38
39 40
41 42
43 44
45 46
47 48
49 50
51 52 53 54 55
56 57 58 59 60
61 62
63 64 65 66 67 68 69
70 71 72 73 74 75 76
77 78
28 27 26 25 24 23 22 21 20 19
38 37 36 35 34 33 32 31 30 29
9 8 7 6 5 4 3 2 1
18 17 16 15 14 13 12 11 10
46 45
48 47
50 49
40 39
42 41
44 43
78 77
69 68 67 66 65 64 63
76 75 74 73 72 71 70
62 61
55 54 53 52 51
60 59 58 57 56

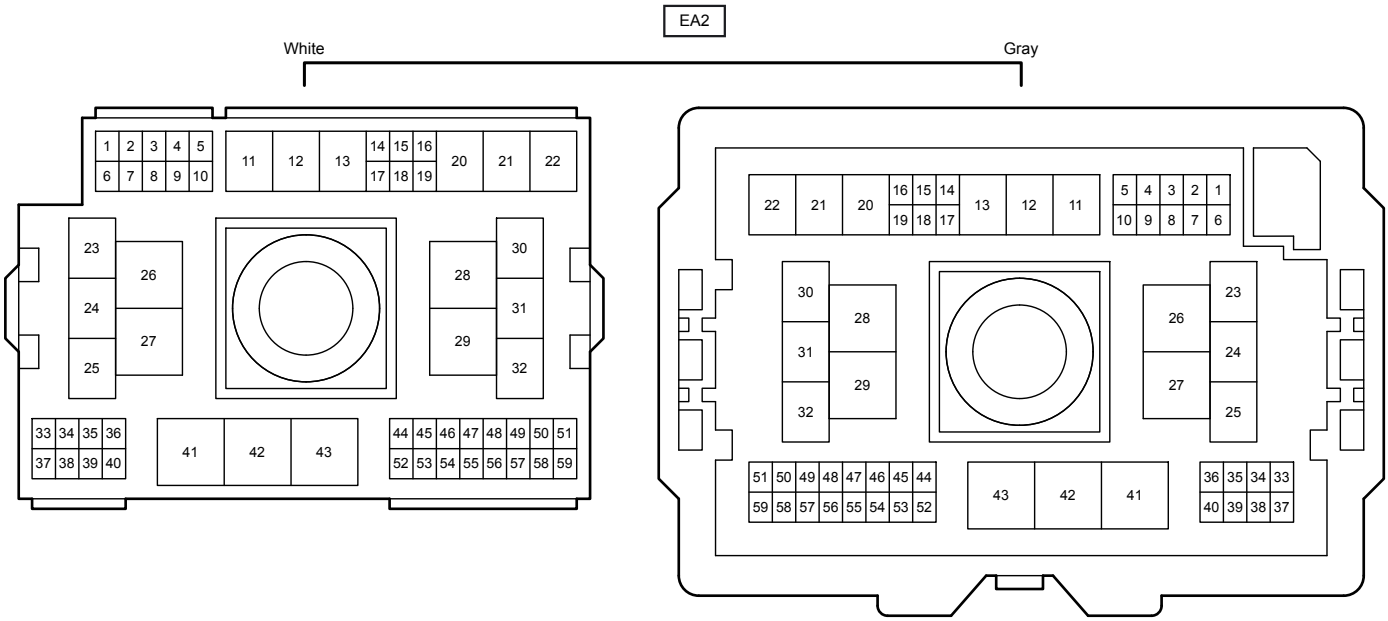
EA2
White
Gray
1 2 3 4 5
6 7 8 9 10
11 12 13
14 15 16
17 18 19
20 21 22
23 26
24 27
25
28 30
29 31
32
33 34 35 36
37 38 39 40
41 42 43
44 45 46 47 48 49 50 51
52 53 54 55 56 57 58 59
22 21 20
16 15 14
19 18 17
13 12 11
5 4 3 2 1
10 9 8 7 6
30 28
31 29
32
26 23
27 24
25
51 50 49 48 47 46 45 44
59 58 57 56 55 54 53 52
43 42 41
36 35 34 33
40 39 38 37

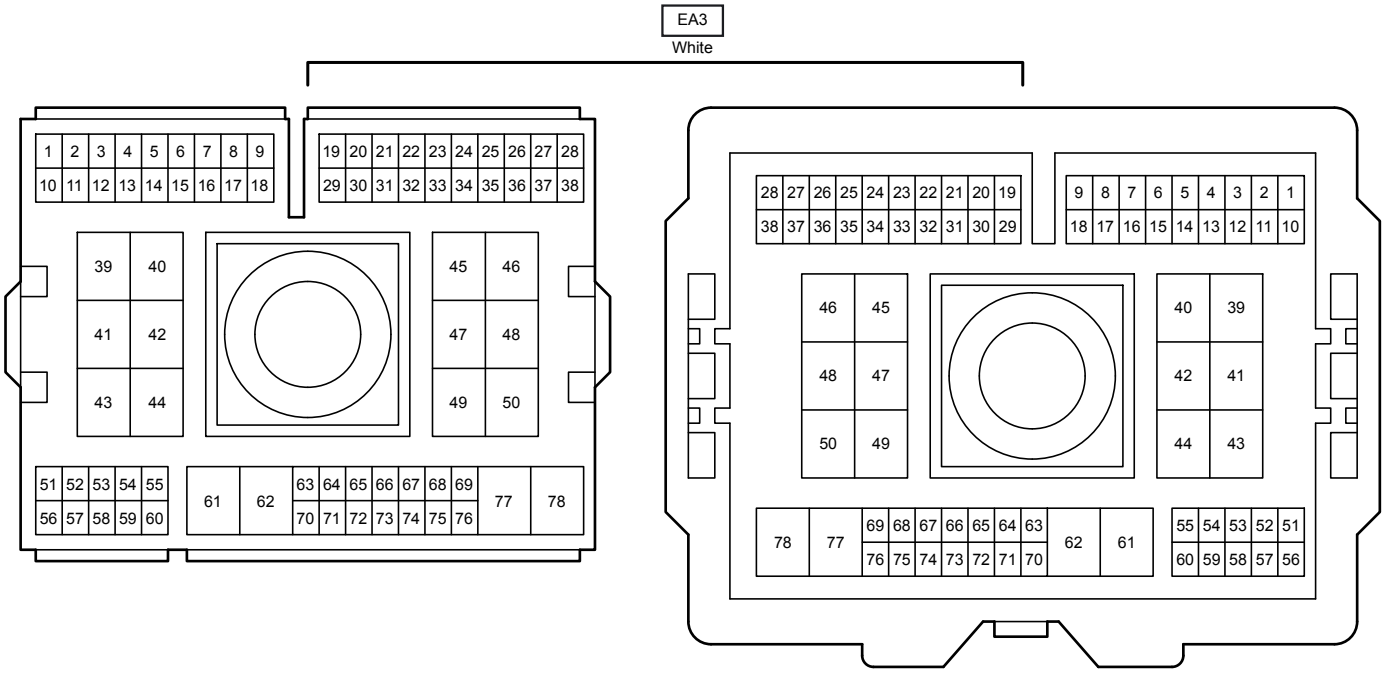
EA3
White

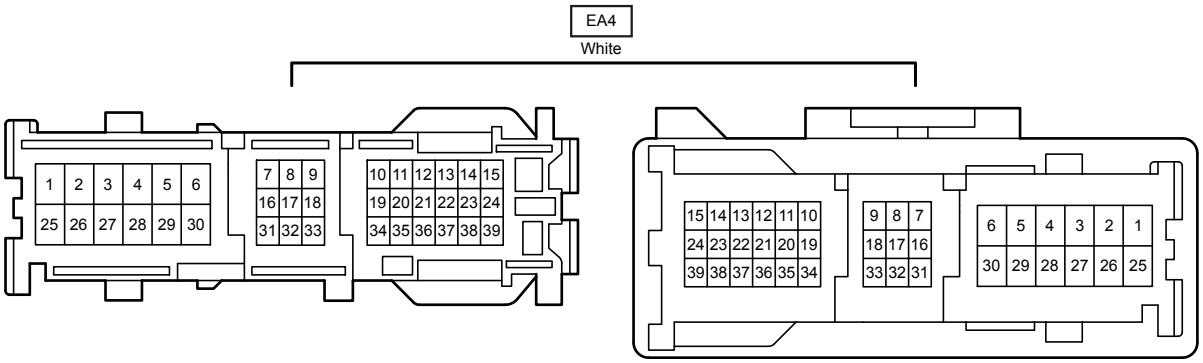
EA4
White

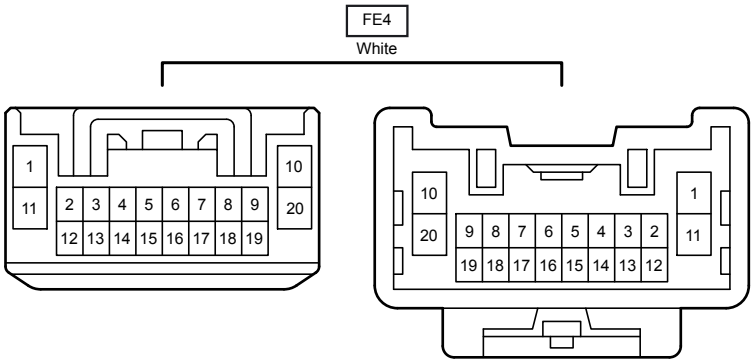
FE4
White

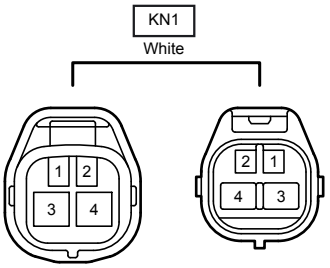
KN1
White

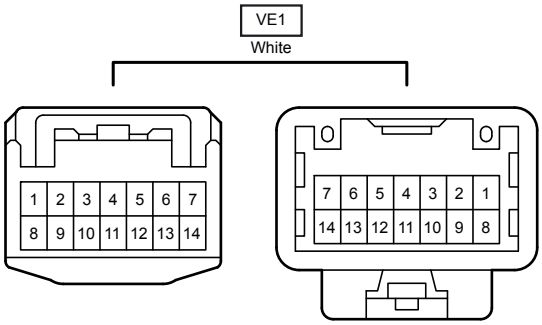
VE1
White

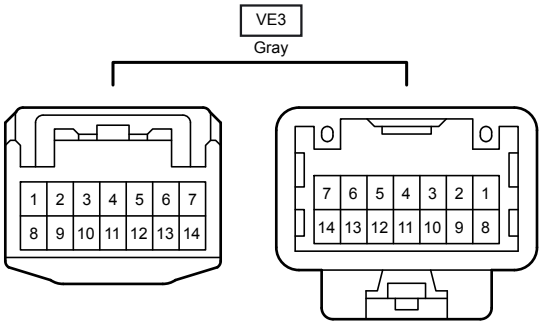
VE3
Gray