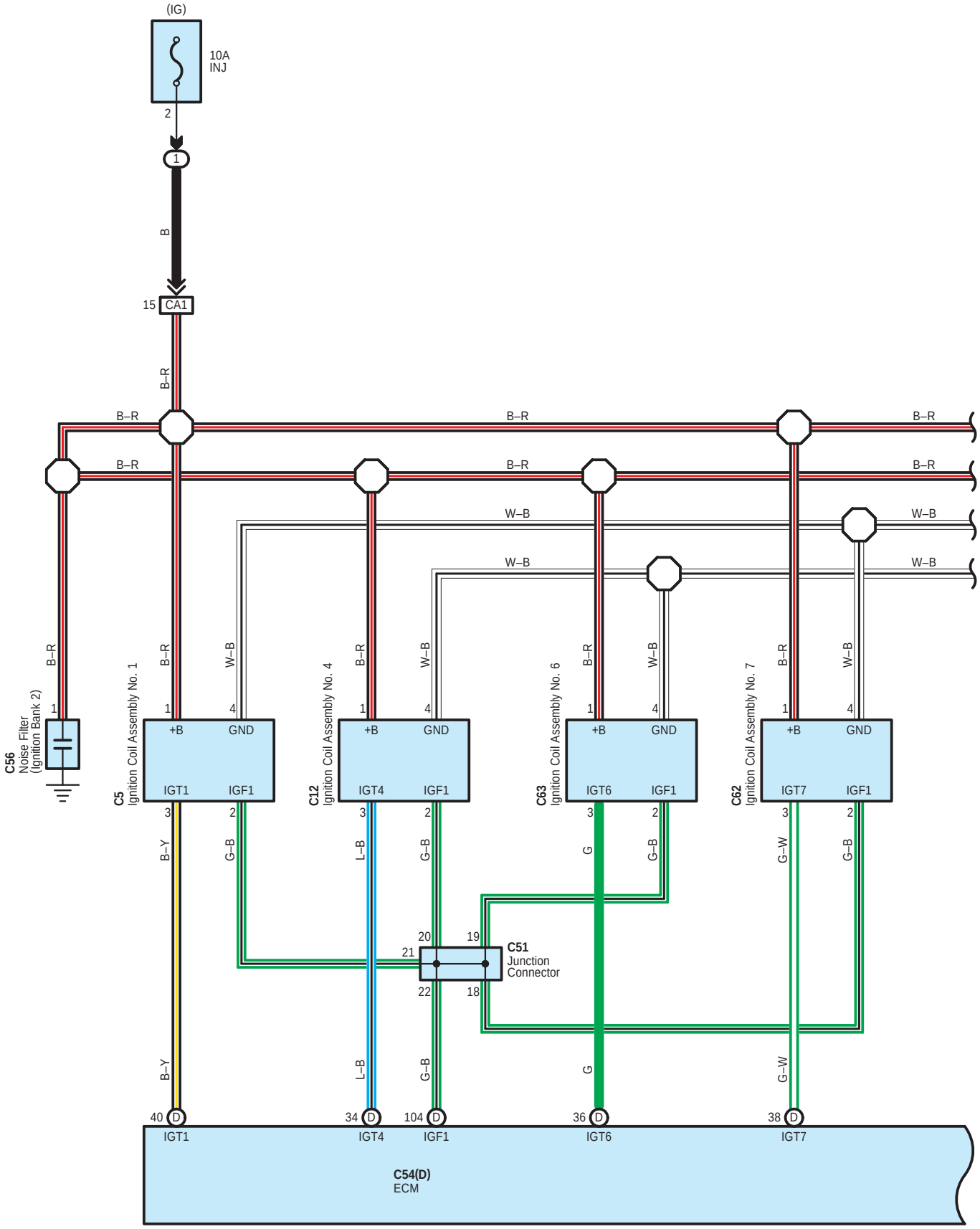
(IG)
10A
INJ
2
1
B
15
CA1
B–R
W–B
C56
Noise Filter
(Ignition Bank 2)
C5
Ignition Coil Assembly No. 1
C12
Ignition Coil Assembly No. 4
C63
Ignition Coil Assembly No. 6
C62
Ignition Coil Assembly No. 7
+B
GND
IGT1
IGF1
IGT4
IGT6
IGT7
B–Y
G–B
L–B
G
G–W
C51
Junction
Connector
40
34
104
36
38
C54(D)
ECM

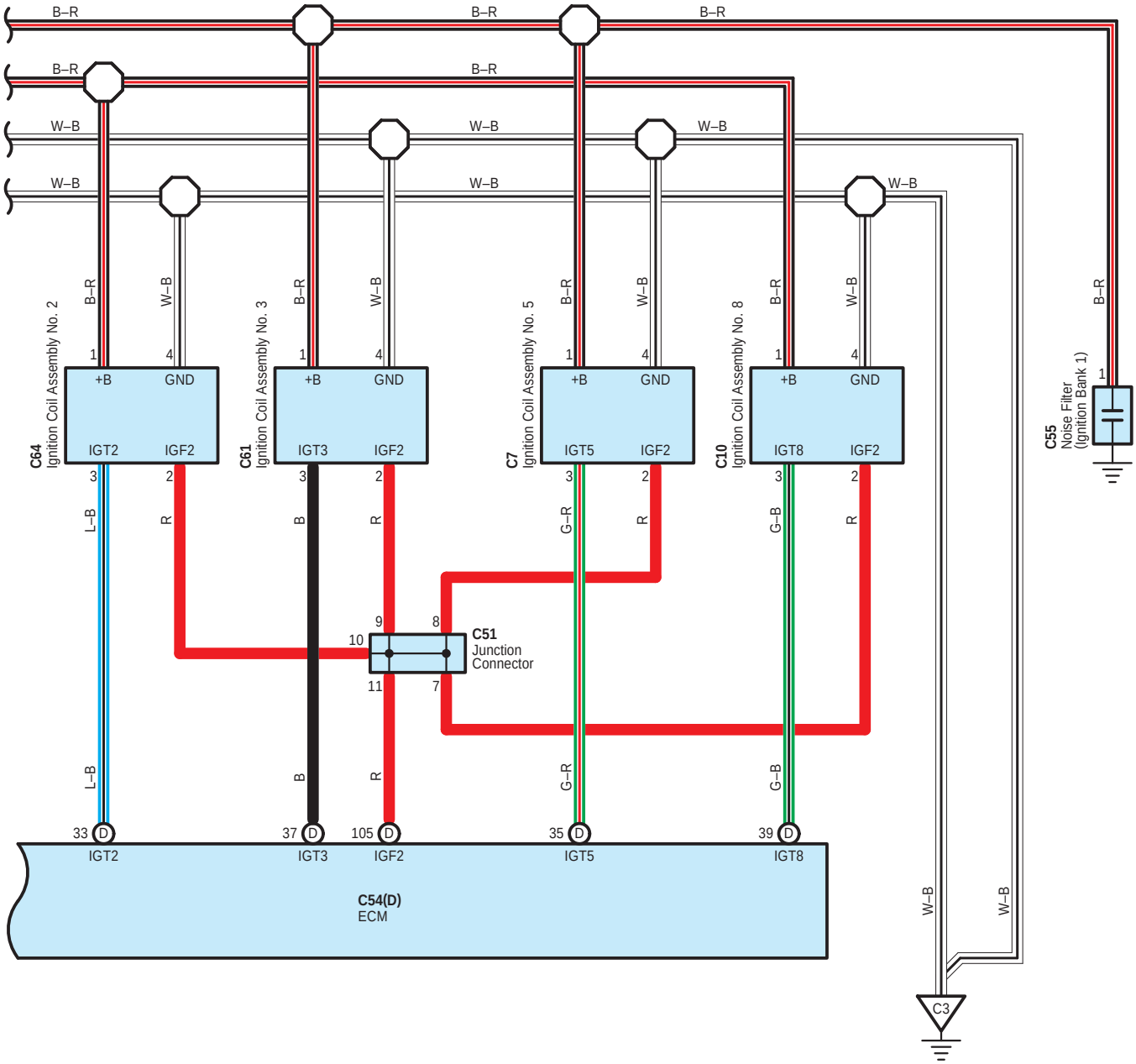
B–R
W–B
C64
Ignition Coil Assembly No. 2
C61
Ignition Coil Assembly No. 3
C7
Ignition Coil Assembly No. 5
C10
Ignition Coil Assembly No. 8
+B
GND
IGT2
IGF2
IGT3
IGT5
IGT8
L–B
R
B
G–R
G–B
C51
Junction
Connector
C55
Noise Filter
(Ignition Bank 1)
C54(D)
ECM
C3

C 5
Black

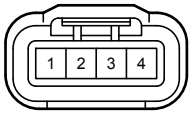

C 7
Black

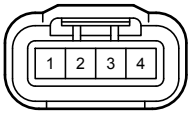

C 10
Black

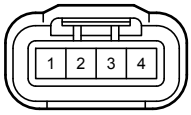

C 12
Black

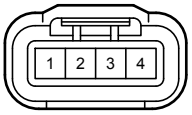

C 51
White

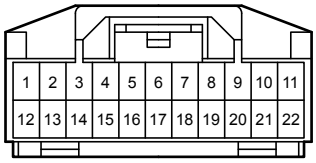

C 54
Black

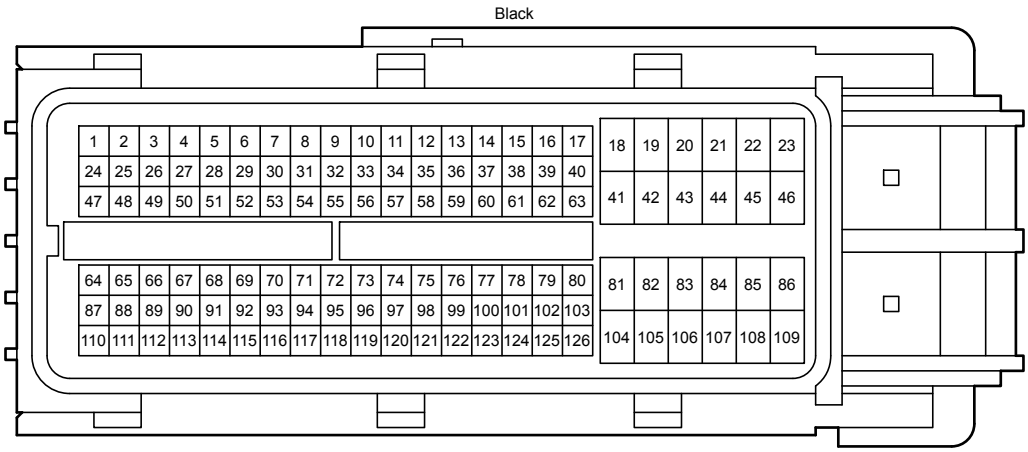

C 55
Gray

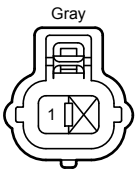

C 56
Gray

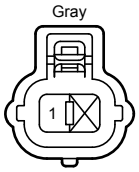

C 61
Gray

C 62
Gray

C 63
Gray

C 64
Gray

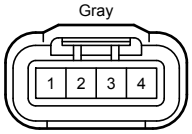
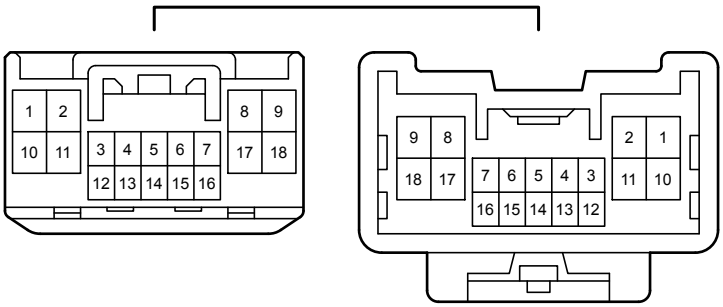
CA1
White