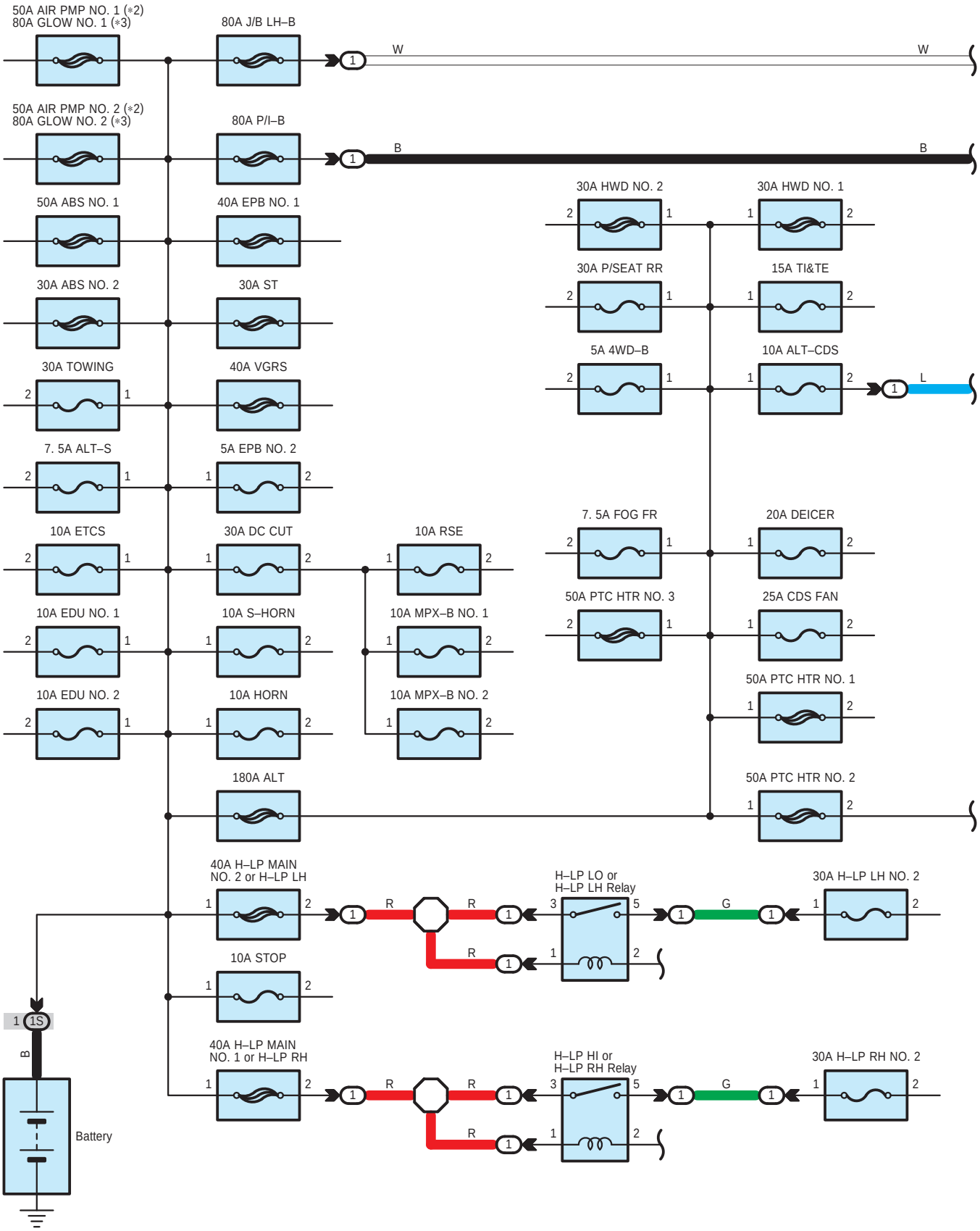
50A AIR PMP NO. 1 (*2)
80A GLOW NO. 1 (*3)
80A J/B LH–B
W
W
50A AIR PMP NO. 2 (*2)
80A GLOW NO. 2 (*3)
80A P/I–B
B
B
50A ABS NO. 1
40A EPB NO. 1
30A ABS NO. 2
30A ST
30A TOWING
40A VGRS
7. 5A ALT–S
5A EPB NO. 2
10A ETCS
30A DC CUT
10A RSE
10A EDU NO. 1
10A S–HORN
10A MPX–B NO. 1
10A EDU NO. 2
10A HORN
10A MPX–B NO. 2
180A ALT
30A HWD NO. 2
30A HWD NO. 1
30A P/SEAT RR
15A TI&TE
5A 4WD–B
10A ALT–CDS
L
7. 5A FOG FR
20A DEICER
50A PTC HTR NO. 3
25A CDS FAN
50A PTC HTR NO. 1
50A PTC HTR NO. 2
40A H–LP MAIN
NO. 2 or H–LP LH
R
R
R
H–LP LO or
H–LP LH Relay
G
30A H–LP LH NO. 2
10A STOP
1S
B
Battery
40A H–LP MAIN
NO. 1 or H–LP RH
R
R
R
H–LP HI or
H–LP RH Relay
G
30A H–LP RH NO. 2

∗ 1 : w/ Heated Windshield Defroster
∗ 2 : 3UR–FE
∗ 3 : 1VD–FTV

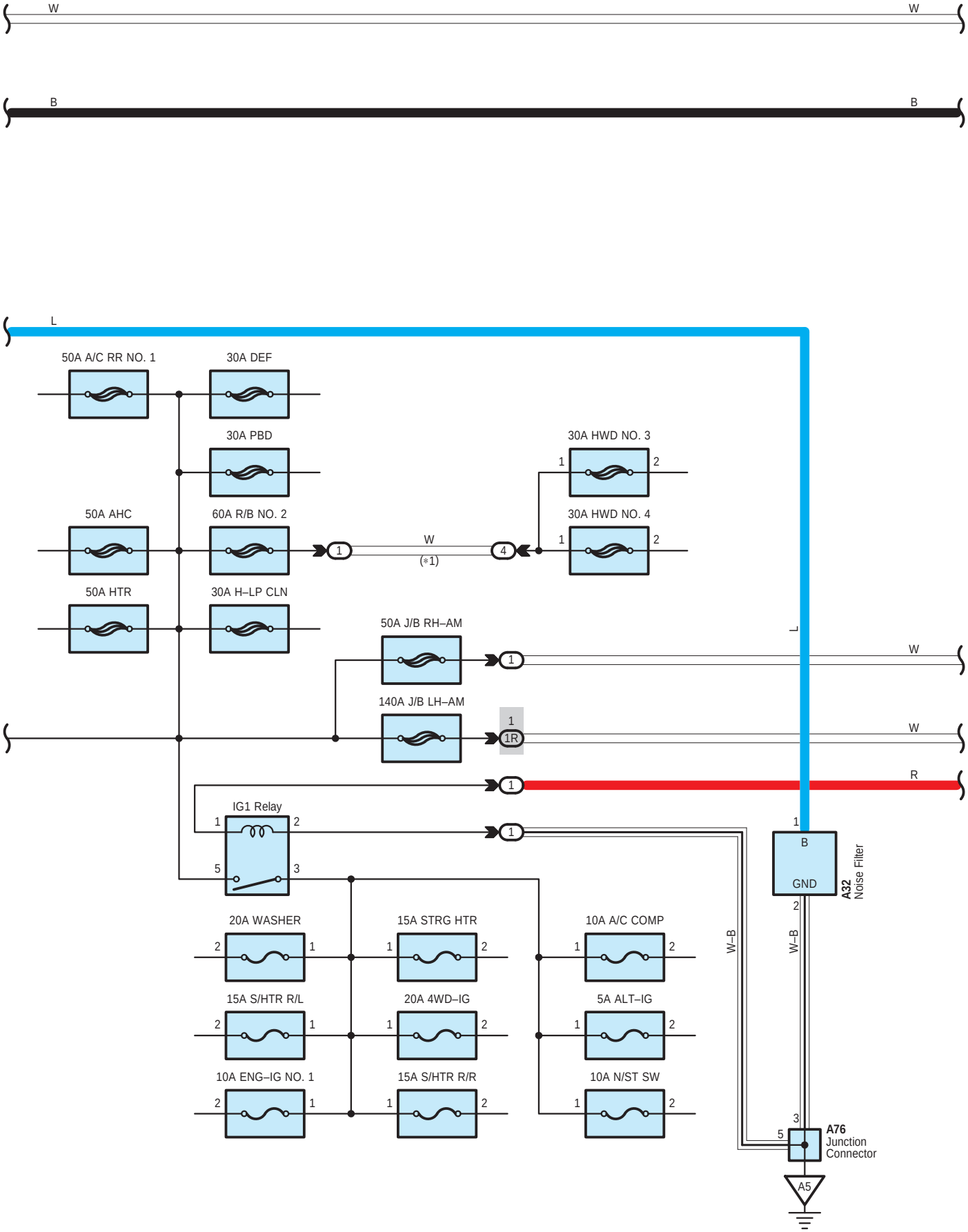

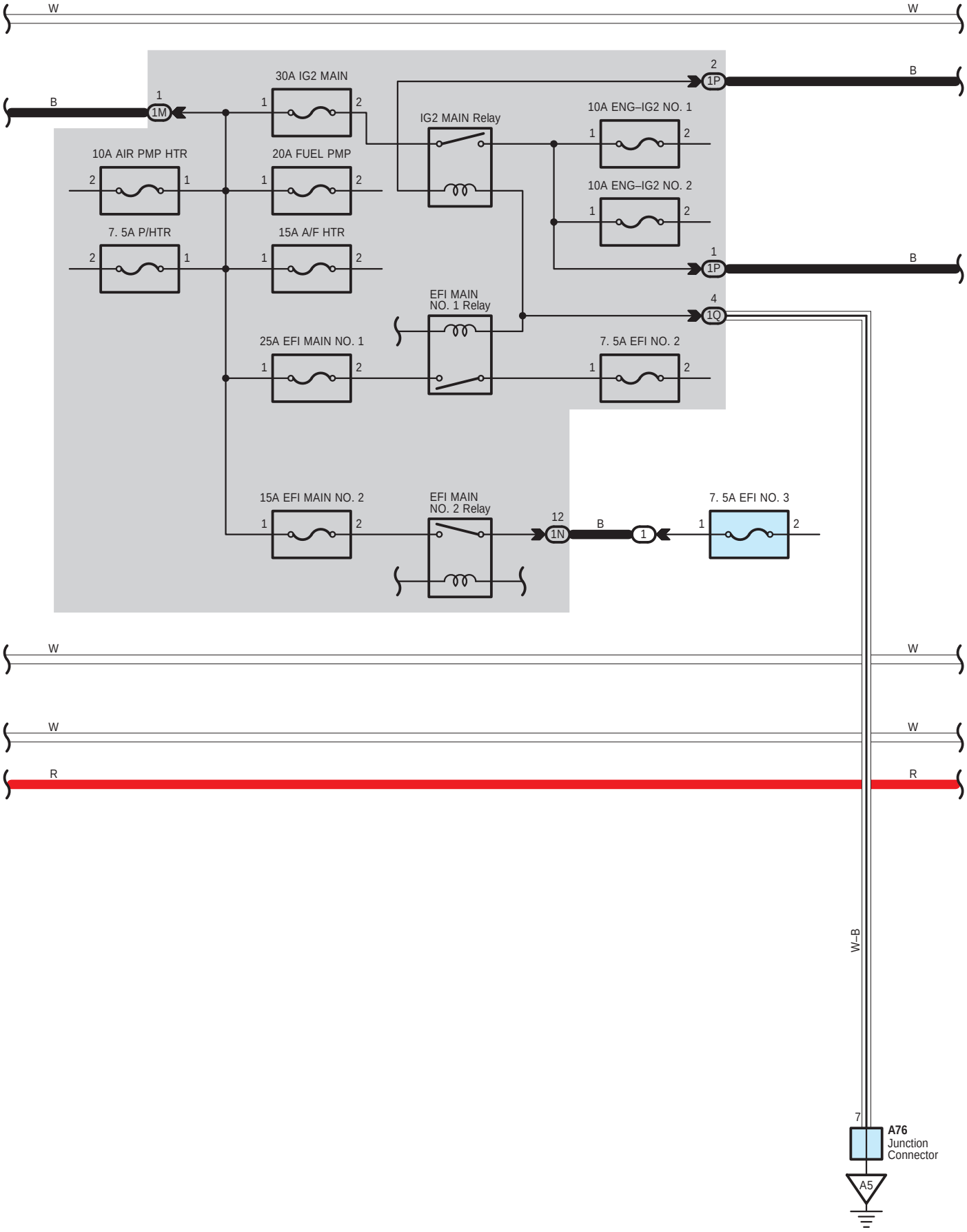
W
W
B
1
1M
30A IG2 MAIN
1
2
2
1P
B
IG2 MAIN Relay
10A ENG–IG2 NO. 1
1
2
10A AIR PMP HTR
2
1
20A FUEL PMP
1
2
10A ENG–IG2 NO. 2
1
2
7. 5A P/HTR
2
1
15A A/F HTR
1
2
1
1P
B
EFI MAIN
NO. 1 Relay
4
1Q
25A EFI MAIN NO. 1
1
2
7. 5A EFI NO. 2
1
2
15A EFI MAIN NO. 2
1
2
EFI MAIN
NO. 2 Relay
12
1N
B
1
7. 5A EFI NO. 3
1
2
W
W
W
W
R
R
W–B
7
A76
Junction
Connector
A5

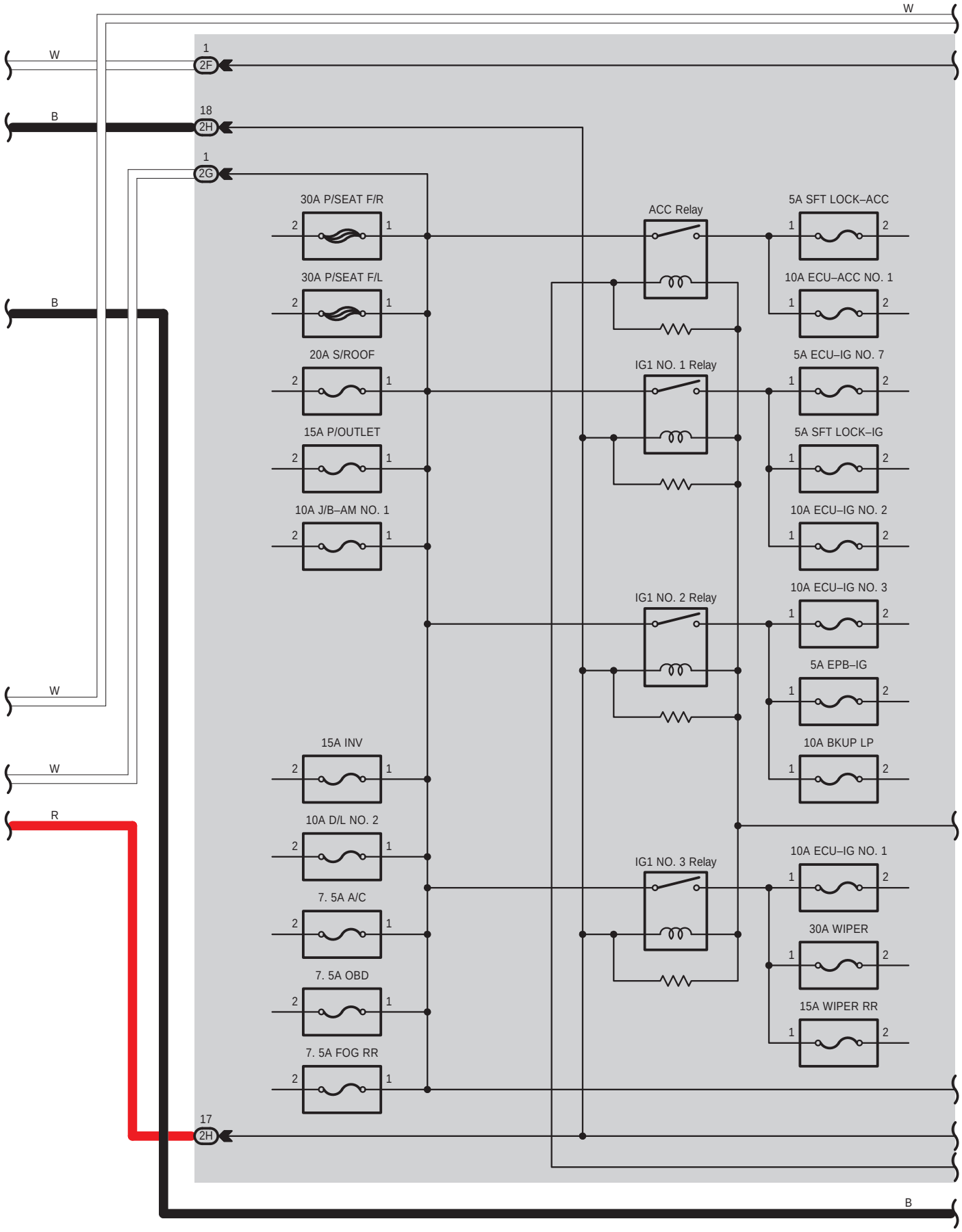
W
W
1
2F
B
18
2H
1
2G
B
W
W
R
17
2H
B
30A P/SEAT F/R
30A P/SEAT F/L
20A S/ROOF
15A P/OUTLET
10A J/B–AM NO. 1
15A INV
10A D/L NO. 2
7. 5A A/C
7. 5A OBD
7. 5A FOG RR
ACC Relay
IG1 NO. 1 Relay
IG1 NO. 2 Relay
IG1 NO. 3 Relay
5A SFT LOCK–ACC
10A ECU–ACC NO. 1
5A ECU–IG NO. 7
5A SFT LOCK–IG
10A ECU–IG NO. 2
10A ECU–IG NO. 3
5A EPB–IG
10A BKUP LP
10A ECU–IG NO. 1
30A WIPER
15A WIPER RR

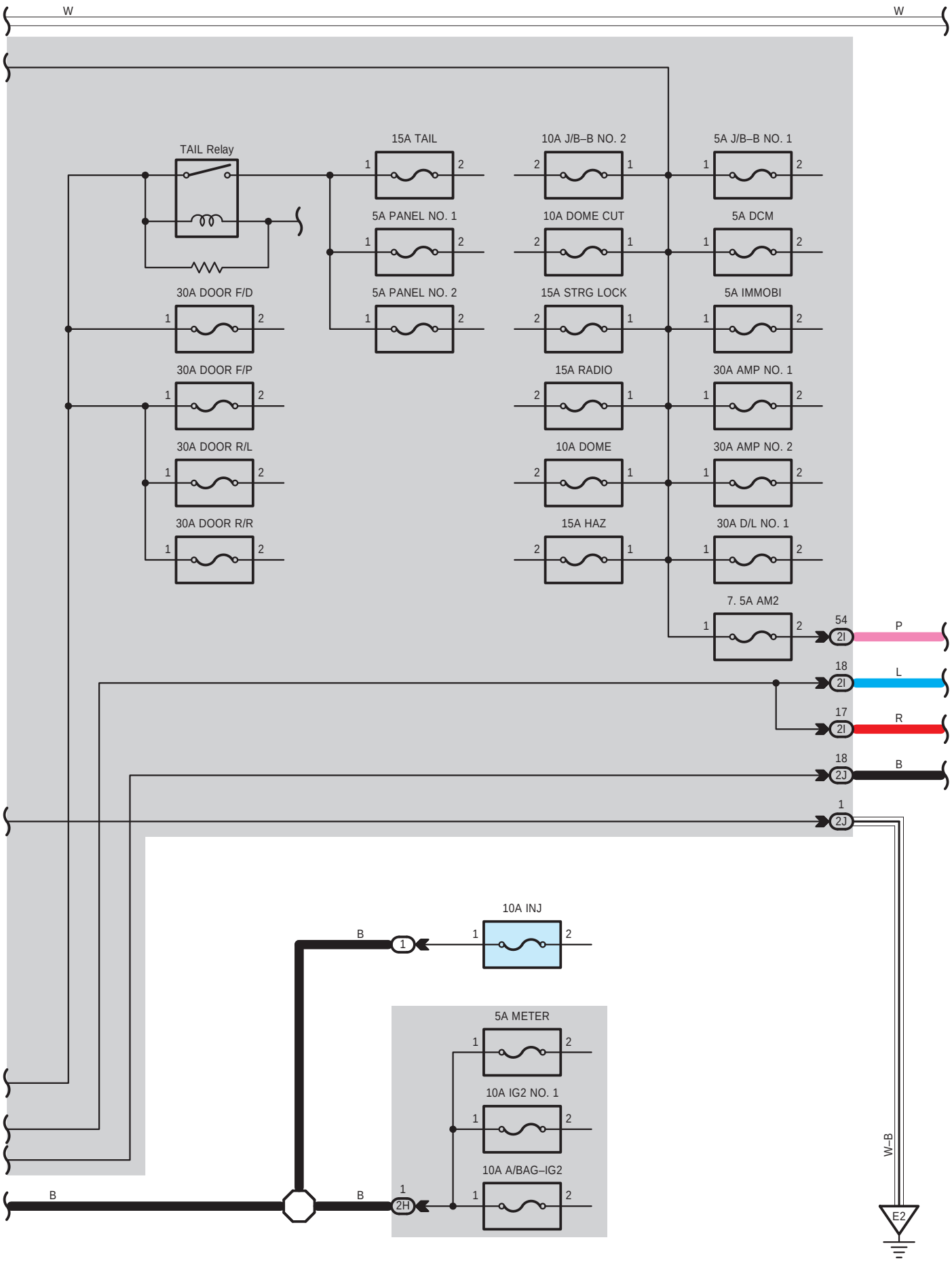
W
W
TAIL Relay
15A TAIL
10A J/B–B NO. 2
5A J/B–B NO. 1
5A PANEL NO. 1
10A DOME CUT
5A DCM
30A DOOR F/D
5A PANEL NO. 2
15A STRG LOCK
5A IMMOBI
30A DOOR F/P
15A RADIO
30A AMP NO. 1
30A DOOR R/L
10A DOME
30A AMP NO. 2
30A DOOR R/R
15A HAZ
30A D/L NO. 1
7. 5A AM2
54
2I
P
18
2I
L
17
2I
R
18
2J
B
1
2J
10A INJ
B
1
5A METER
10A IG2 NO. 1
10A A/BAG–IG2
B
B
1
2H
W–B
E2

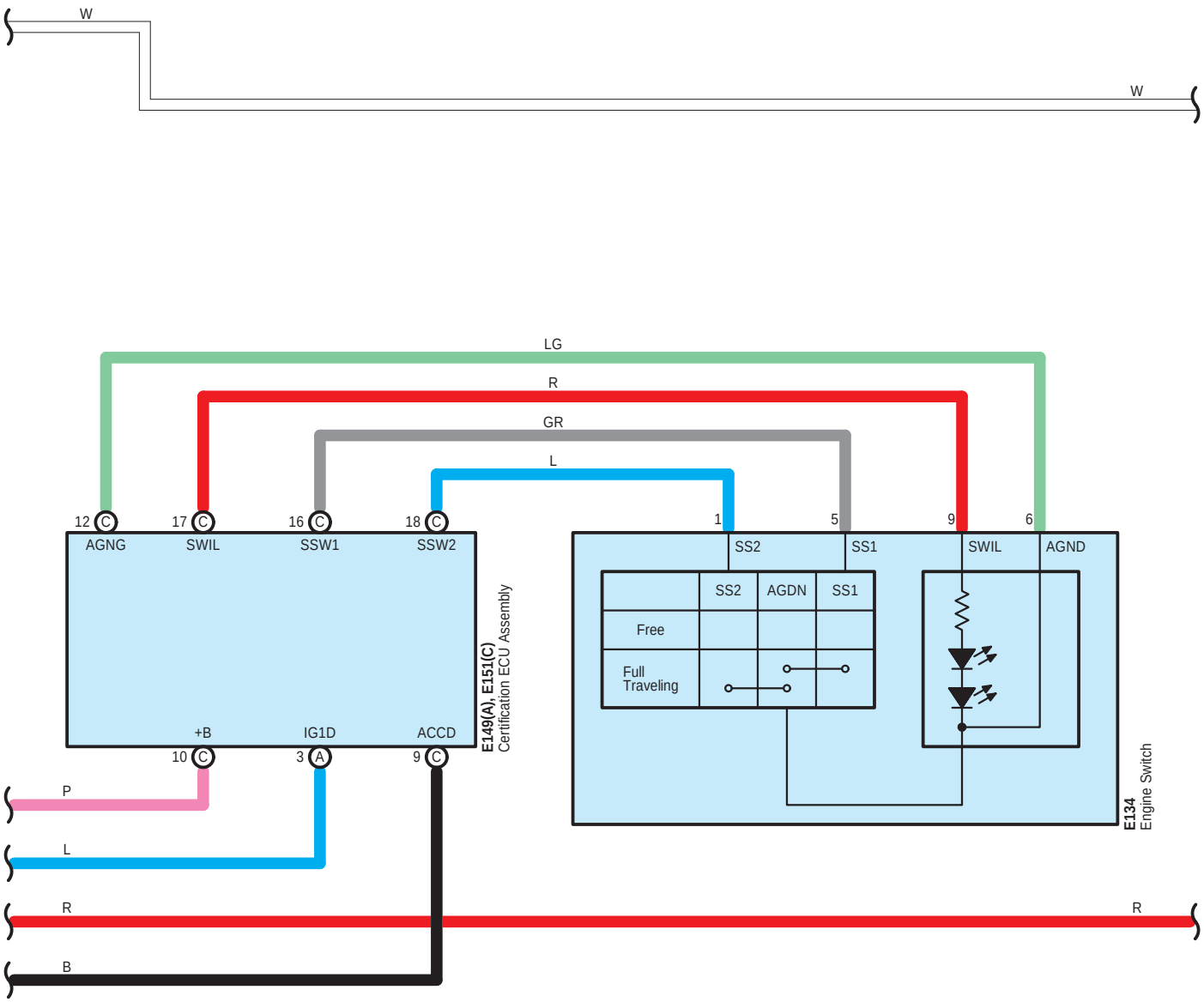
W
W
LG
R
GR
L
12 C
17 C
16 C
18 C
AGNG
SWIL
SSW1
SSW2
+B
IG1D
ACCD
10 C
3 A
9 C
E149(A), E151(C)
Certification ECU Assembly
1
5
9
6
SS2
SS1
SWIL
AGND
SS2
AGDN
SS1
Free
Full
Traveling
E134
Engine Switch
P
L
R
R
B

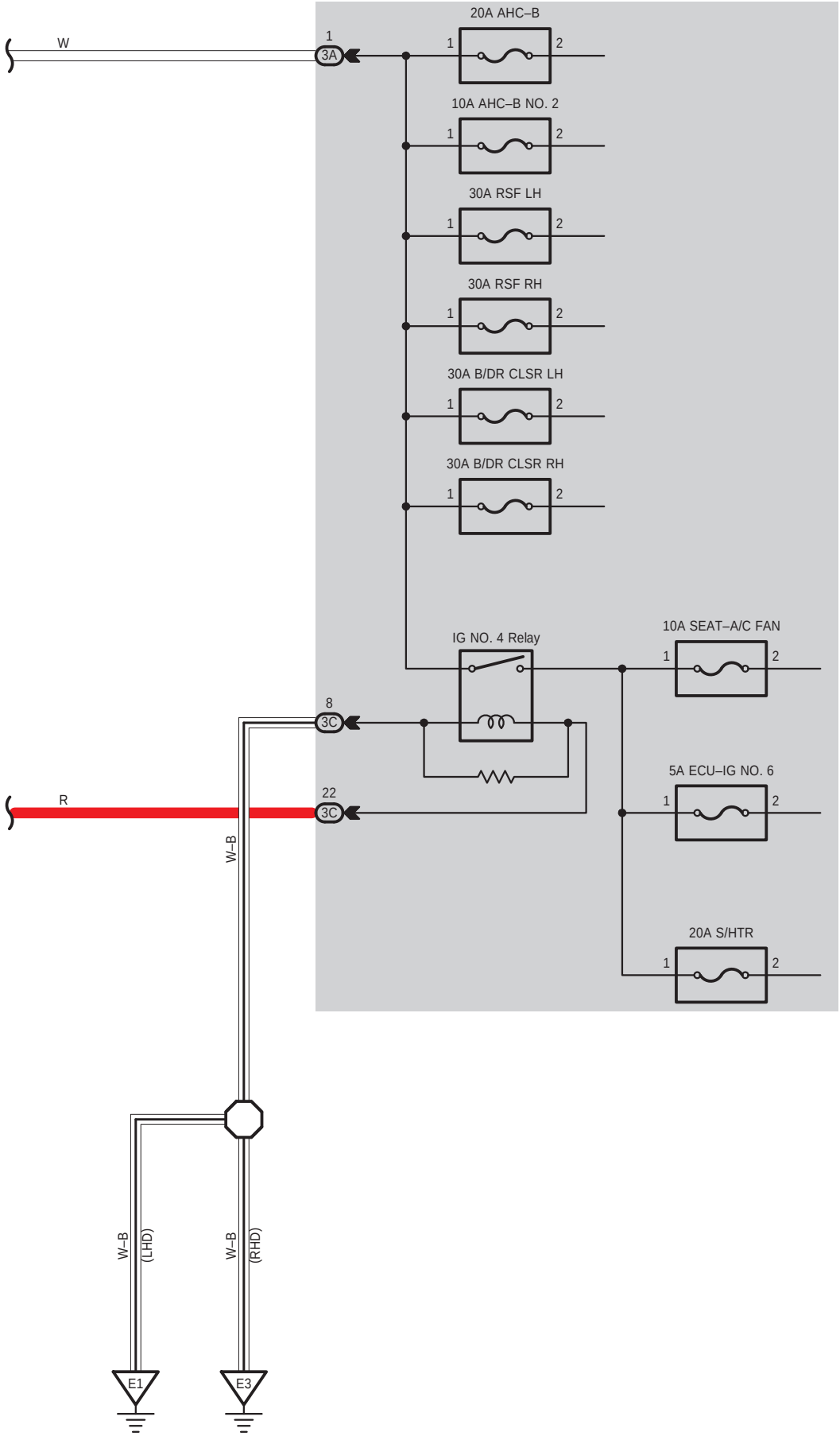
W
1
3A
20A AHC–B
10A AHC–B NO. 2
30A RSF LH
30A RSF RH
30A B/DR CLSR LH
30A B/DR CLSR RH
IG NO. 4 Relay
10A SEAT–A/C FAN
8
3C
5A ECU–IG NO. 6
R
22
3C
W–B
20A S/HTR
W–B
(LHD)
W–B
(RHD)
E1
E3

A 32
Black

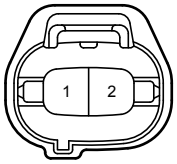

A 76
Black

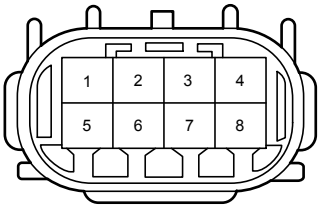

E134
Black

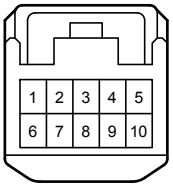

E149
White

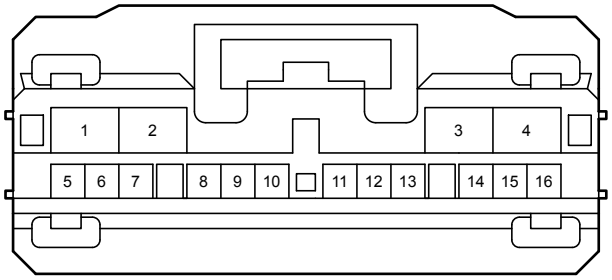

E151
Black

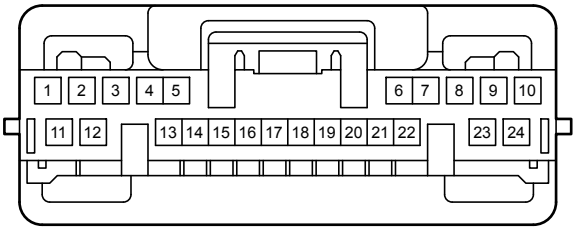

1M
Black

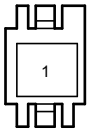

1N
White

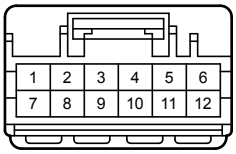

1P
Black

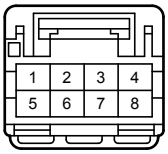

1Q
White

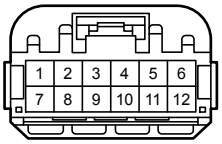

1R
White

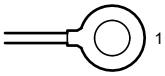

1S
White

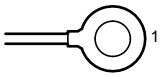

2F
Gray

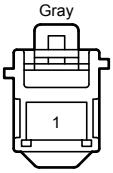

2G
Gray

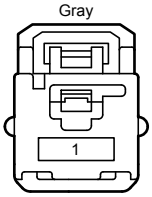

2H
White

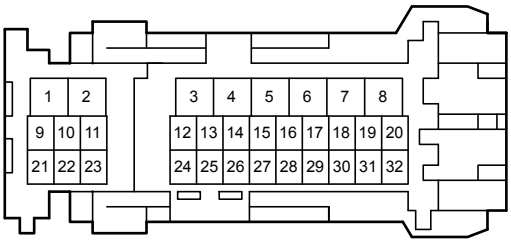

2I
White

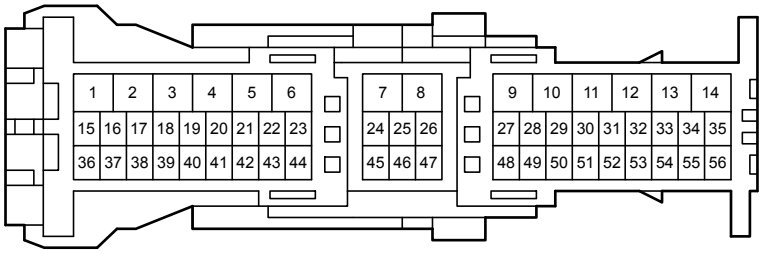

2J
White

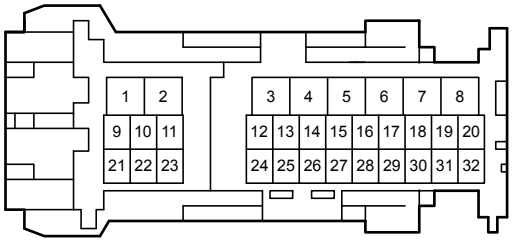

3A
Black

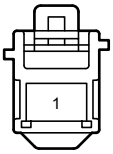

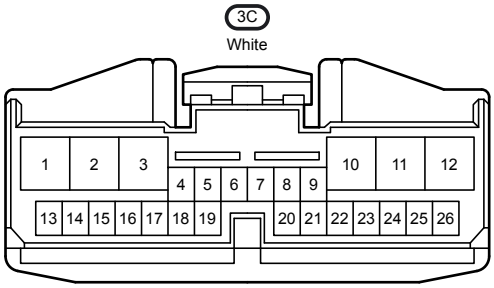
3C
White
1
2
3
4
5
6
7
8
9
10
11
12
13
14
15
16
17
18
19
20
21
22
23
24
25
26