(Cont. next page)

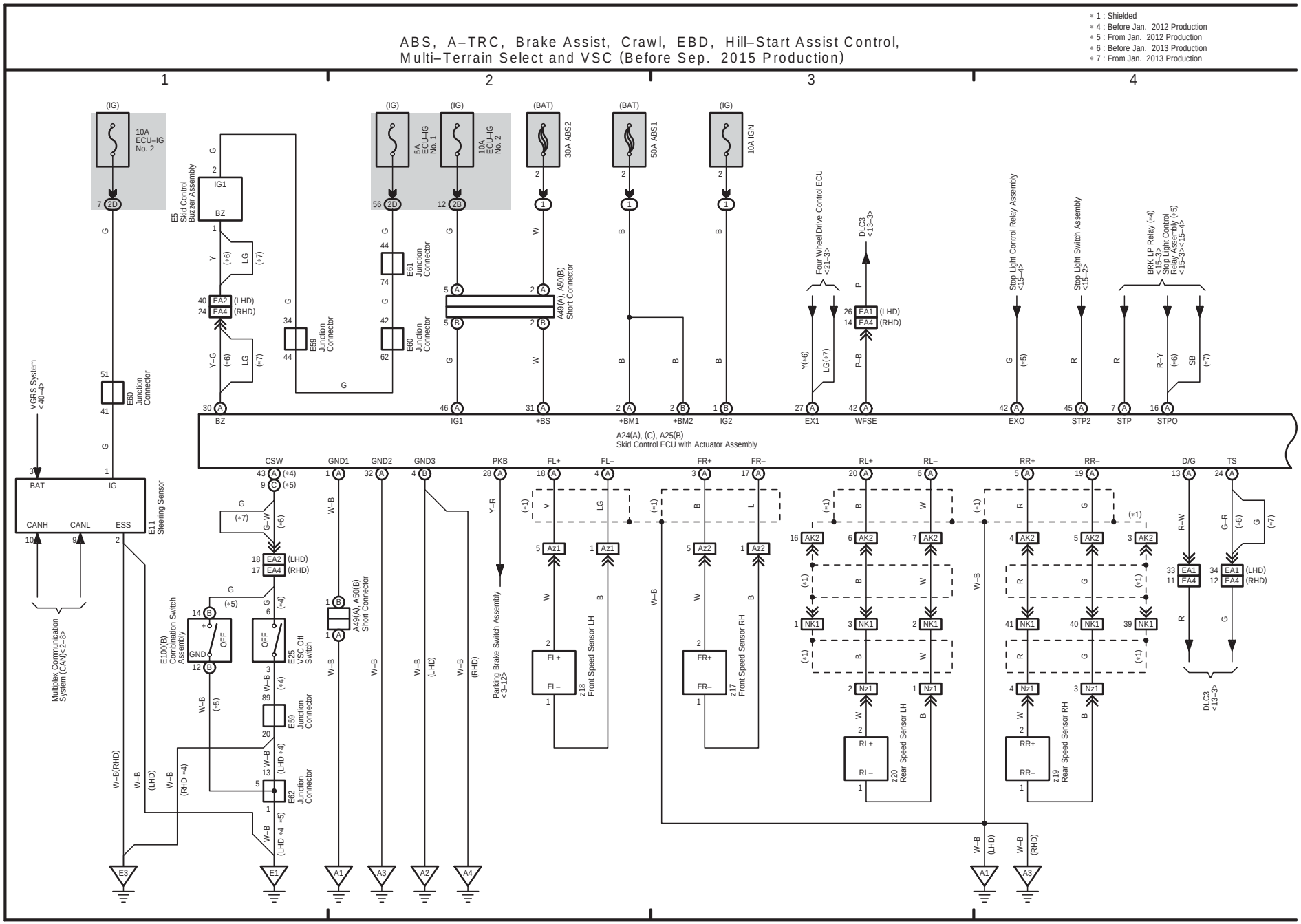
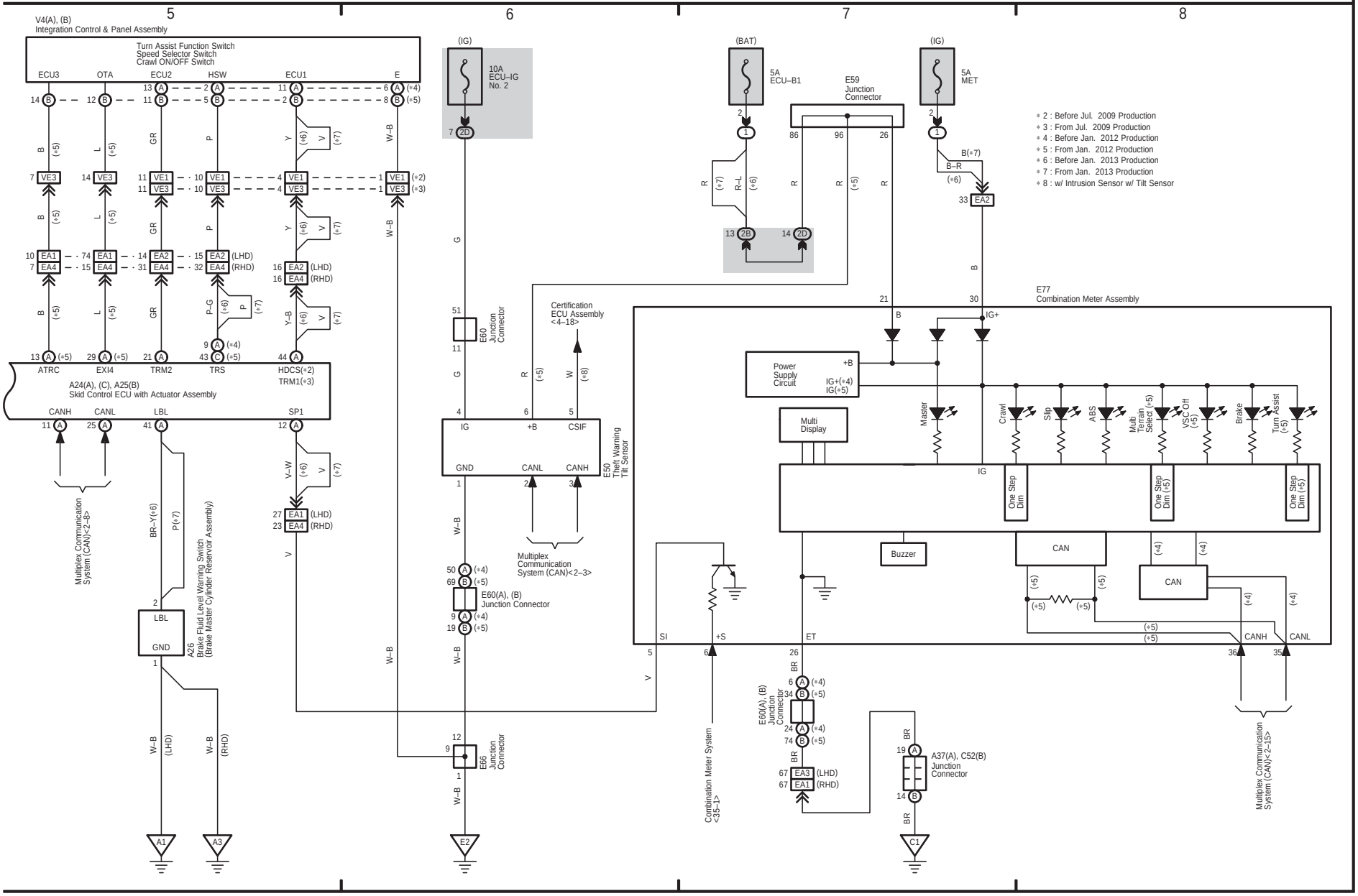
ABS, A–TRC, Brake Assist, Crawl, EBD, Hill–Start Assist Control,
Multi–Terrain Select and VSC (Before Sep. 2015 Production)