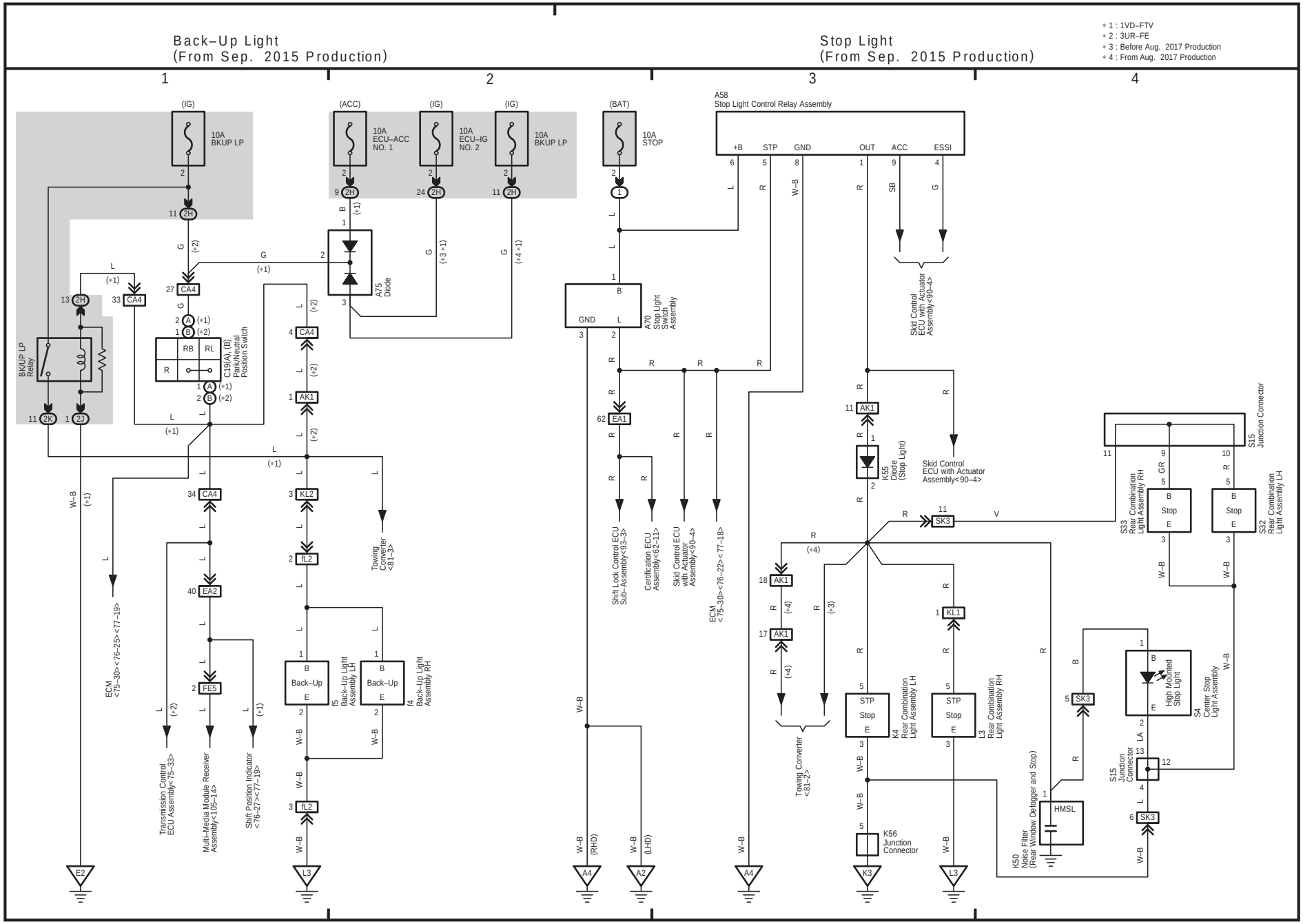
Back–Up Light
(From Sep. 2015 Production)
Stop Light
(From Sep. 2015 Production)
∗1 : 1VD–FTV
∗2 : 3UR–FE
∗3 : Before Aug. 2017 Production
∗4 : From Aug. 2017 Production
1
2
3
4
(IG)
10A
BKUP LP
(ACC)
10A
ECU–ACC
NO. 1
10A
ECU–IG
NO. 2
(BAT)
10A
STOP
A58
Stop Light Control Relay Assembly
+B
STP
GND
OUT
ACC
ESSI
A75
Diode
BKUP LP
Relay
C19(A), (B)
Park/Neutral
Position Switch
RB
RL
R
A70
Stop Light
Switch
Assembly
EA1
AK1
CA4
KL2
fL2
EA2
FE5
Back–Up
f5
Back–Up Light
Assembly LH
f4
Back–Up Light
Assembly RH
Towing
Converter
<81–3>
ECM
<75–30><76–25><77–19>
Transmission Control
ECU Assembly<75–33>
Multi–Media Module Receiver
Assembly<105–14>
Shift Position Indicator
<76–27><77–19>
Shift Lock Control ECU
Sub–Assembly<93–3>
Certification ECU
Assembly<62–11>
Skid Control ECU
with Actuator
Assembly<90–4>
ECM
<75–30><76–22><77–18>
Skid Control
ECU with Actuator
Assembly<90–4>
K55
Diode
(Stop Light)
SK3
S15
Junction Connector
S33
Rear Combination
Light Assembly RH
S32
Rear Combination
Light Assembly LH
Stop
K4
Rear Combination
Light Assembly LH
L3
Rear Combination
Light Assembly RH
KL1
Towing Converter
<81–2>
K56
Junction
Connector
HMSL
K50
Noise Filter
(Rear Window Defogger and Stop)
High Mounted
Stop Light
S4
Center Stop
Light Assembly
S15
Junction
Connector
E2
L3
A4
A2
K3