83 LX 570 / LX 460 / LX 450d

(Cont. next page)

Active Height Control Suspension and Adaptive Variable Suspension (From Sep. 2015 Production)

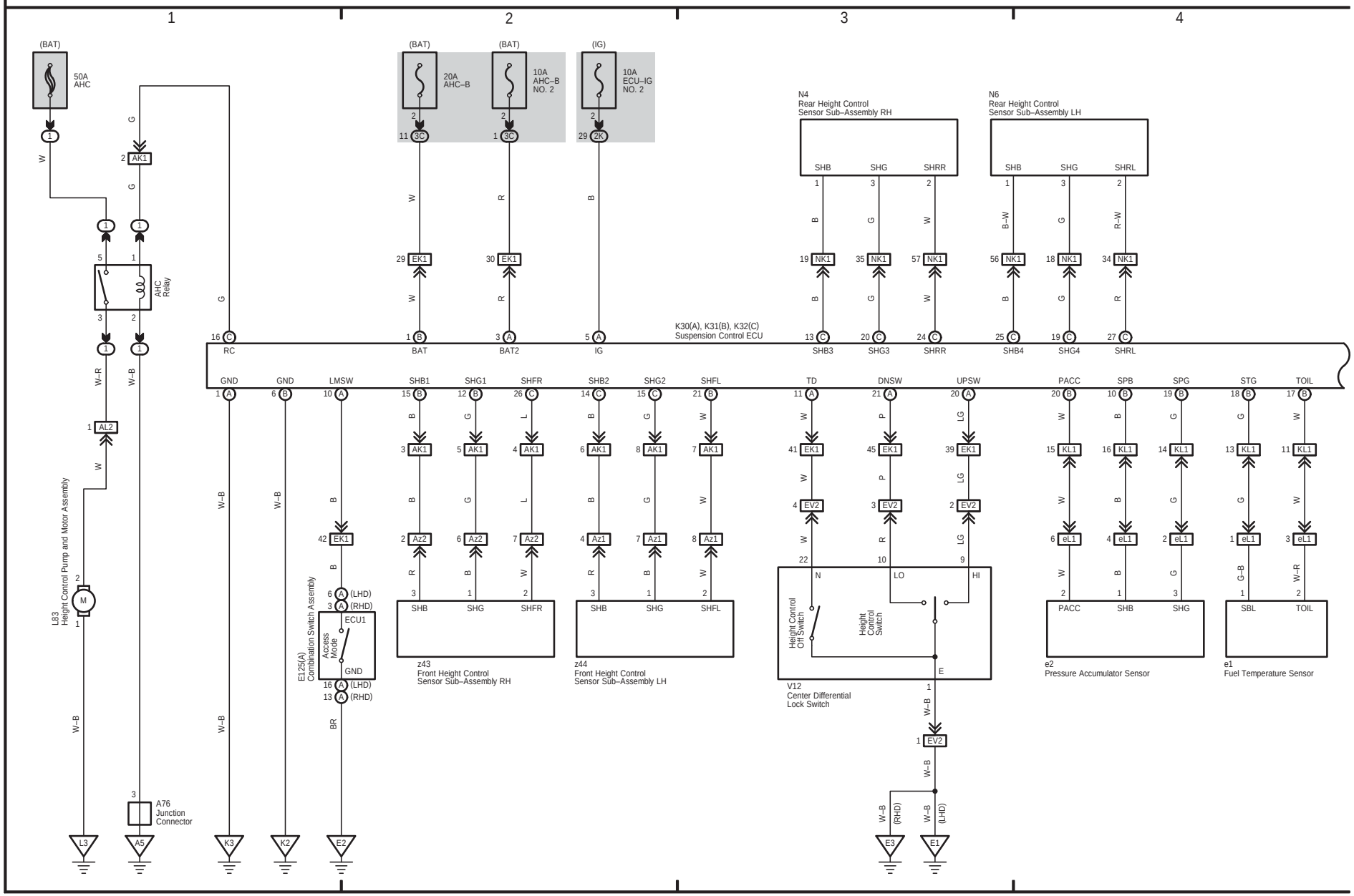

(Cont. next page)

Active Height Control Suspension and Adaptive Variable Suspension (From Sep. 2015 Production)

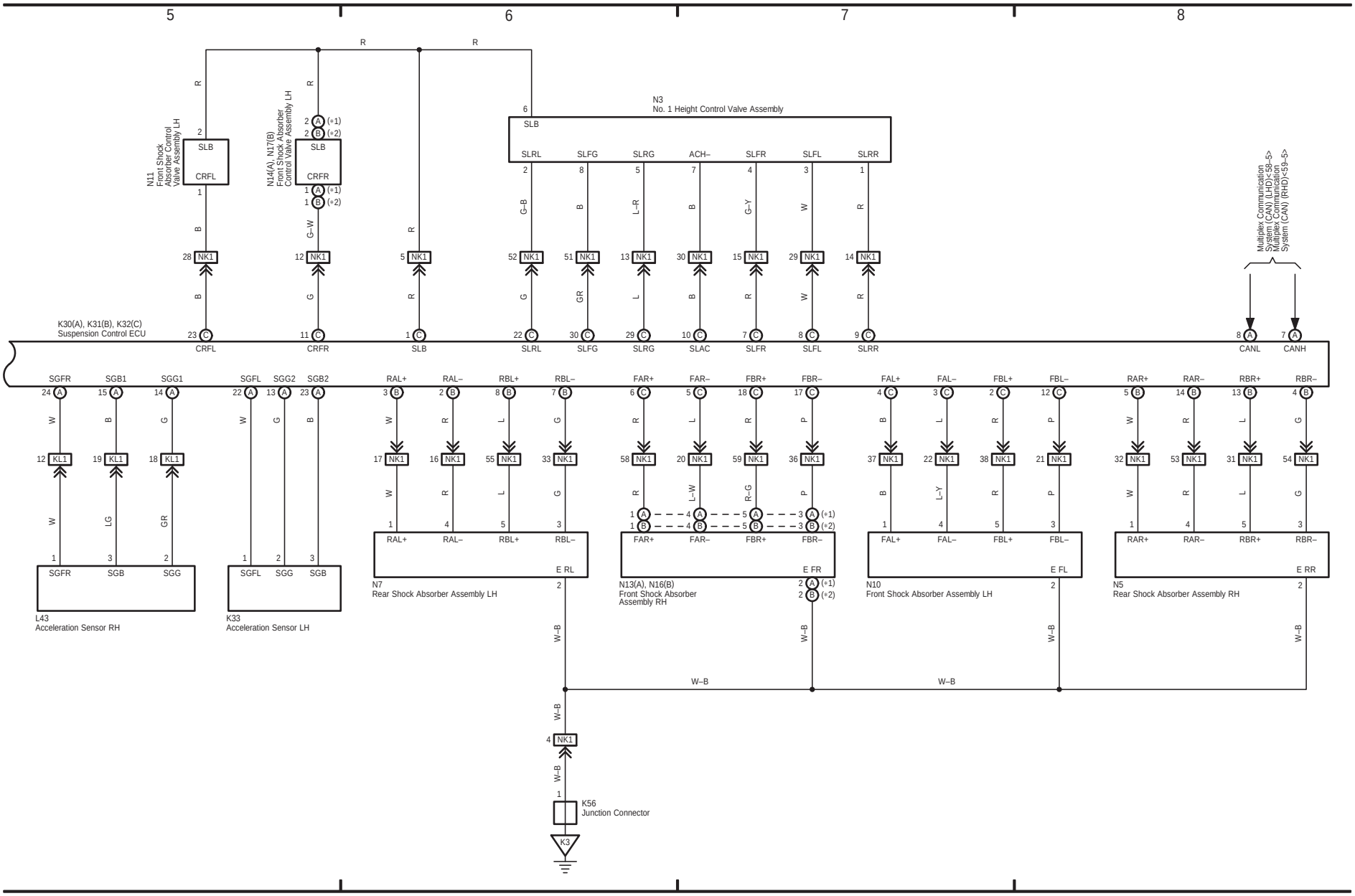

83 LX 570 / LX 460 / LX 450d (Cont' d)

Active Height Control Suspension and Adaptive Variable Suspension (From Sep. 2015 Production)

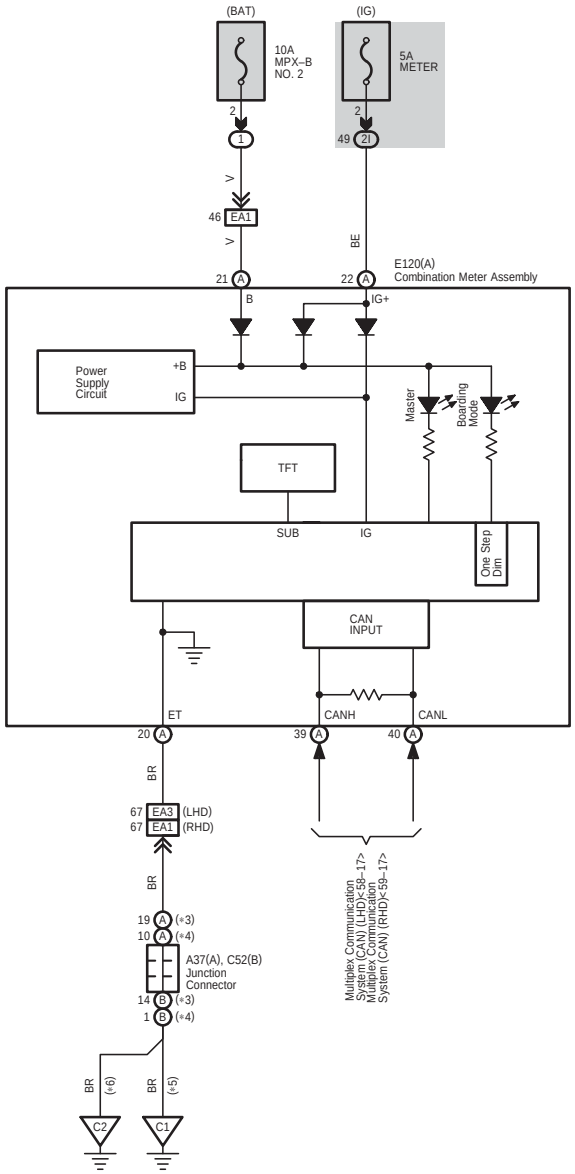

* 3 : 3UR–FE, 1VD–FTV w/o DPF
* 4 : 1VD–FTV w/ DPF
* 5 : 3UR–FE, RHD 1VD–FTV
* 6 : LHD 1VD–FTV