SF1EF-02

COMPONENTS

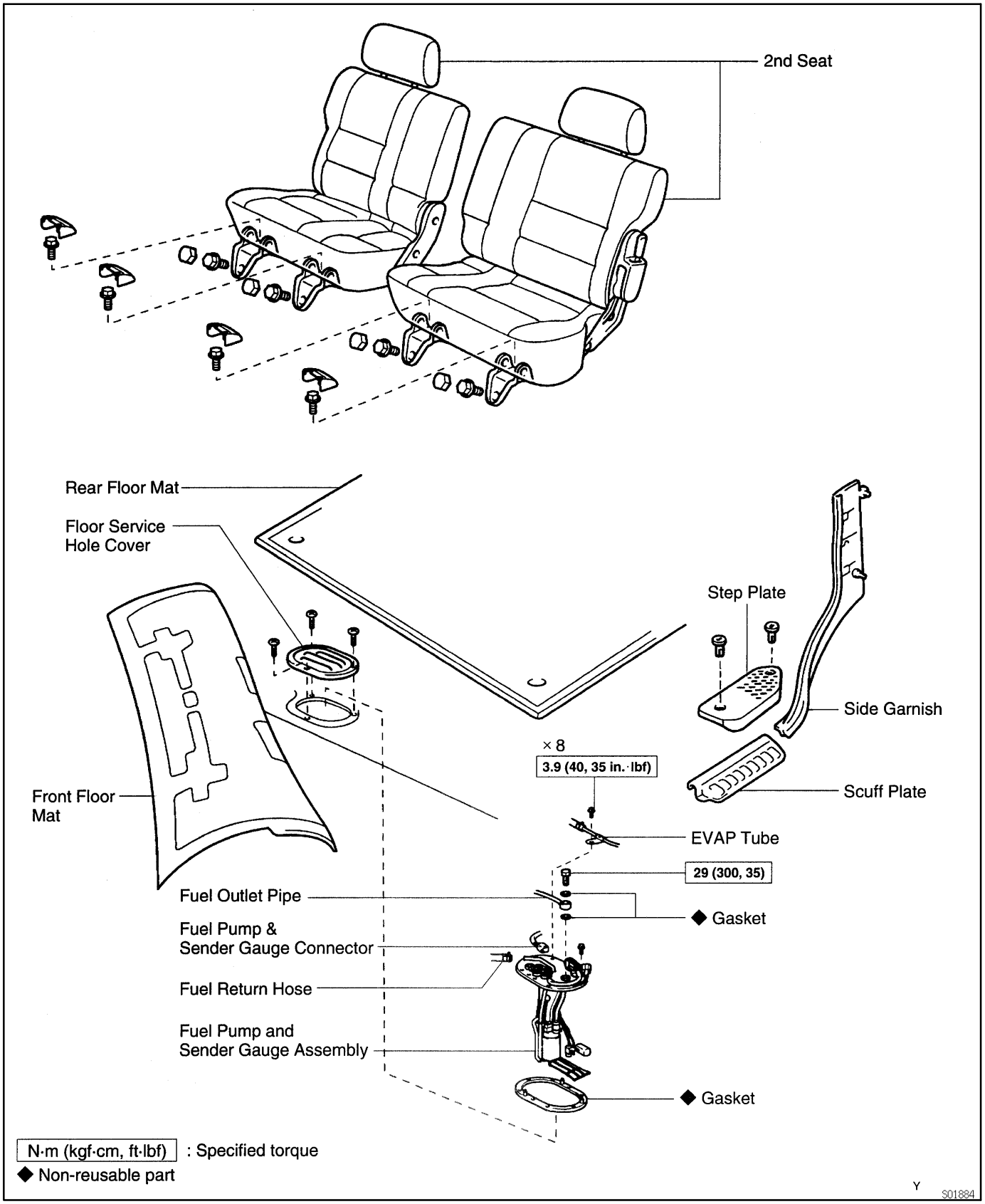

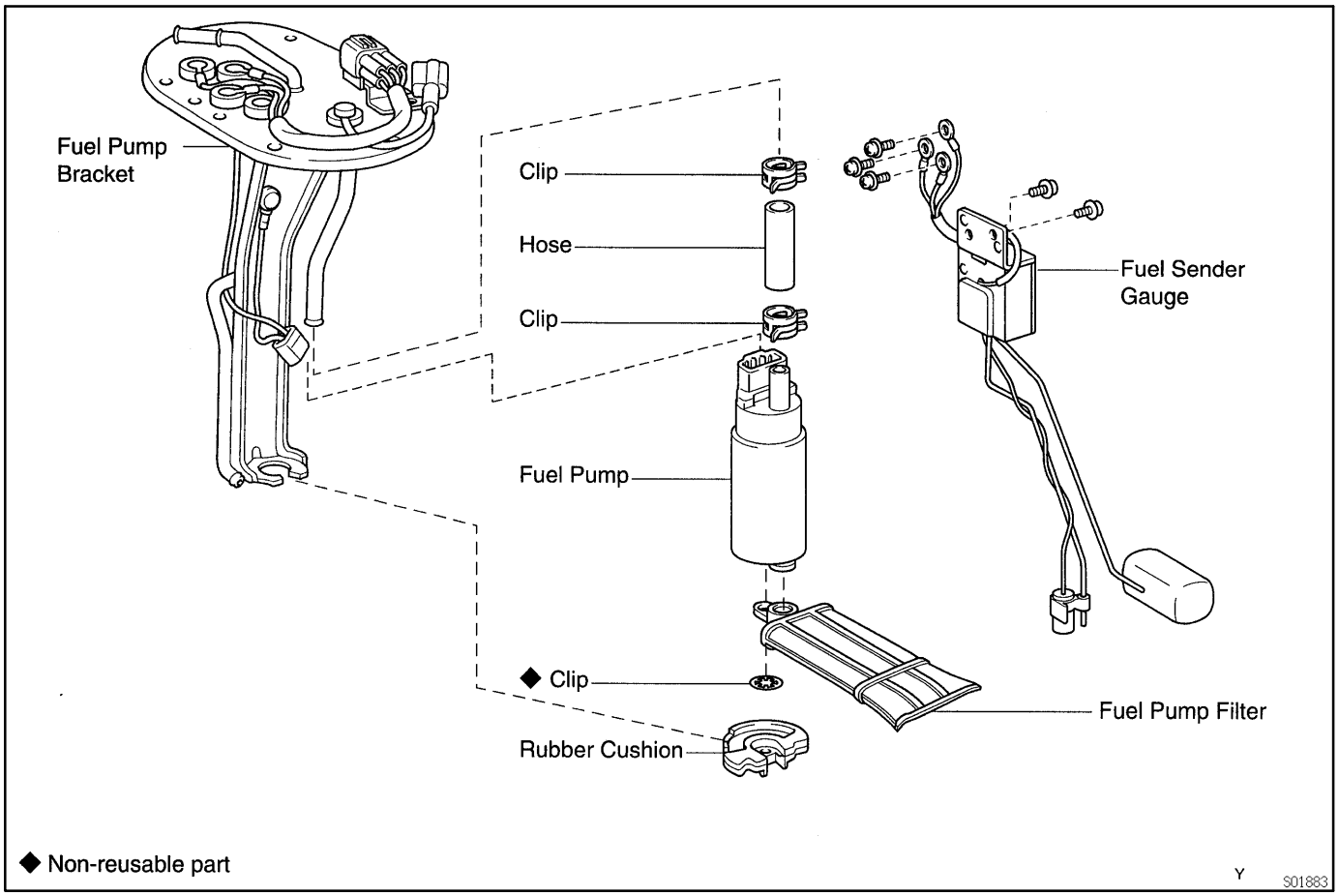
Fuel Pump Bracket
Clip
Hose
Clip
Fuel Pump
◆ Clip
Rubber Cushion
Fuel Sender Gauge
Fuel Pump Filter
◆ Non-reusable part
Y
S01883