HEADLIGHT AND TAILLIGHT SYSTEM

BE1PQ–01
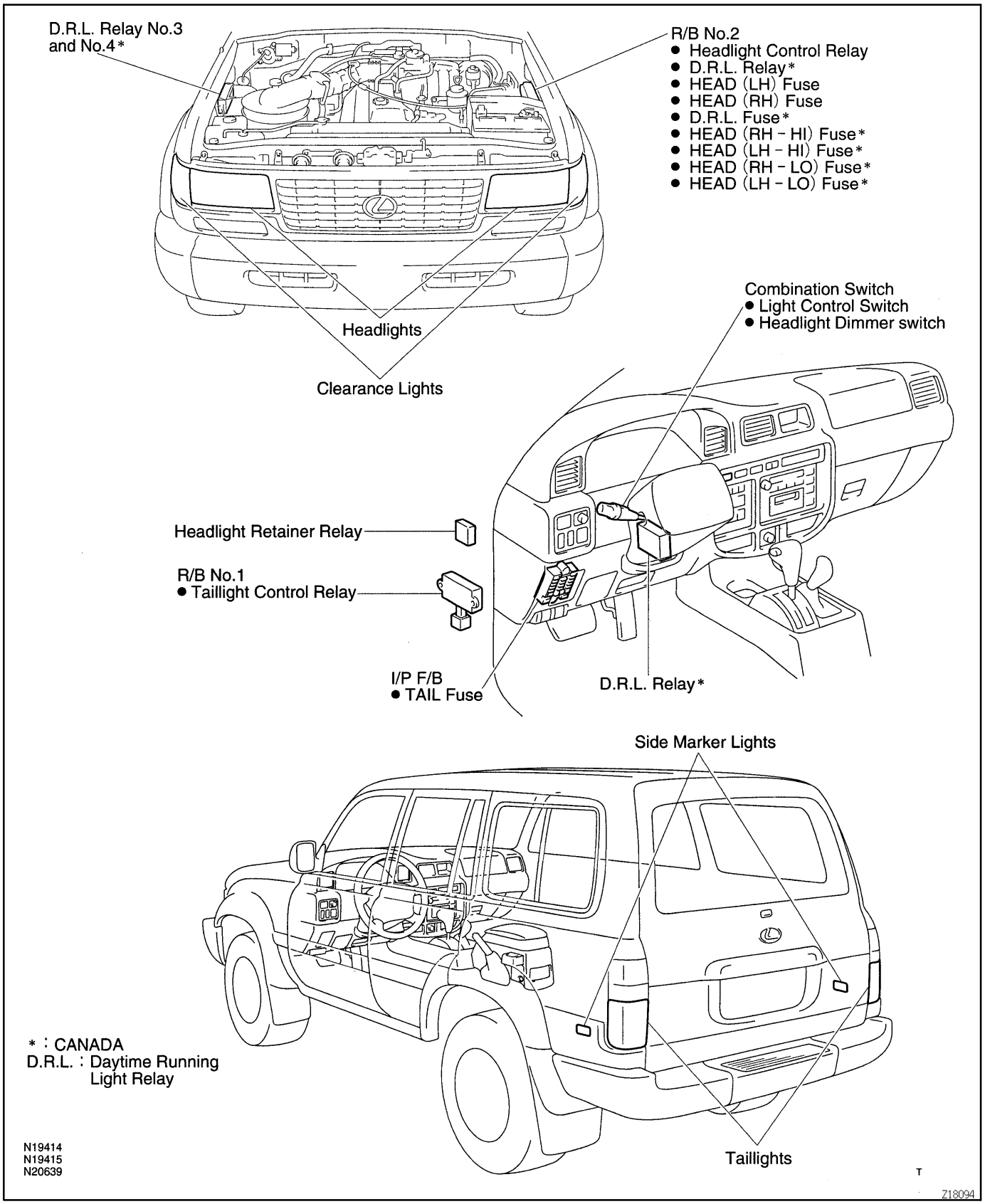
LOCATION