POWER DOOR LOCK CONTROL SYSTEM

BE1QD–01
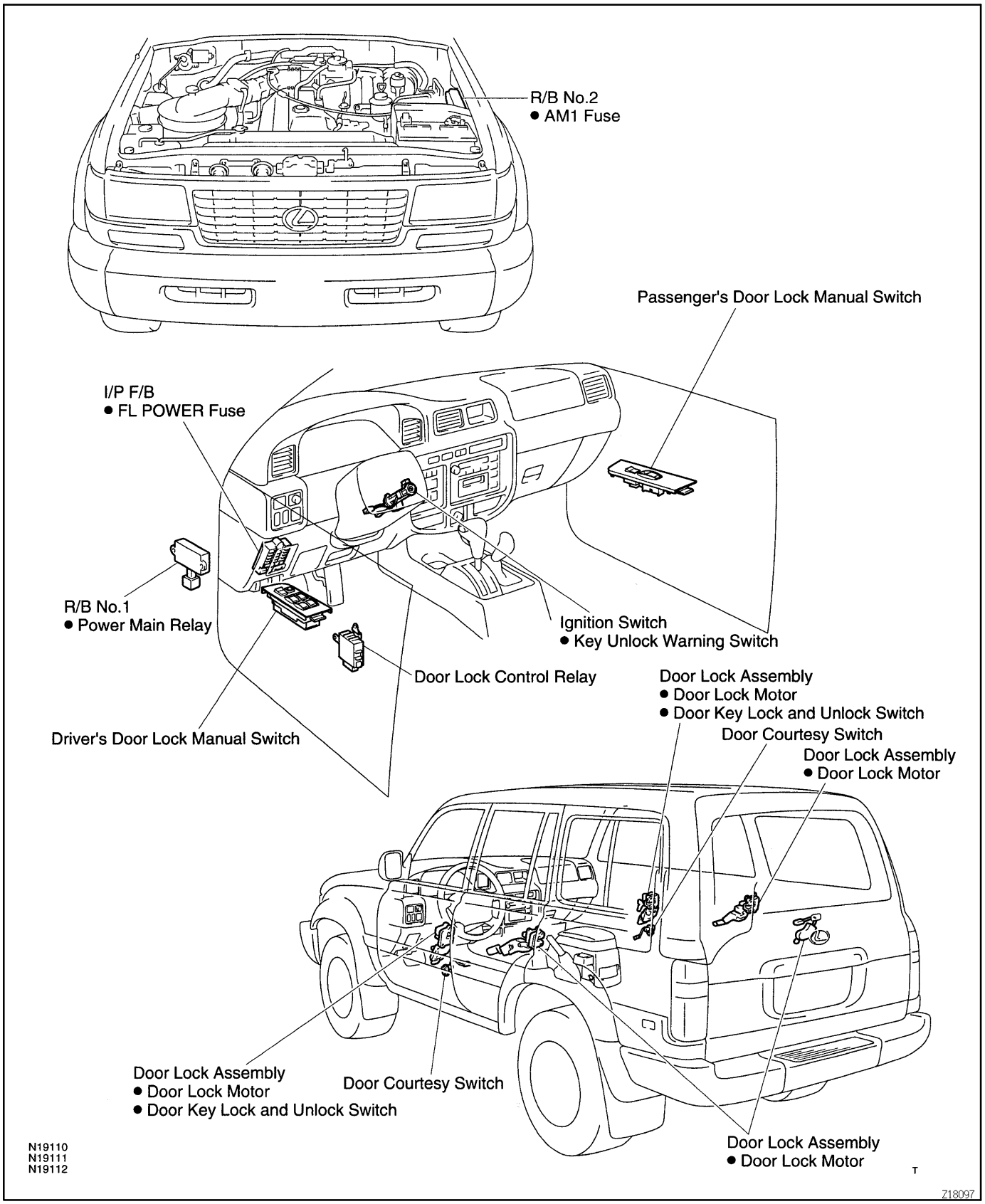
LOCATION