QUARTER WINDOW GLASS

COMPONENTS
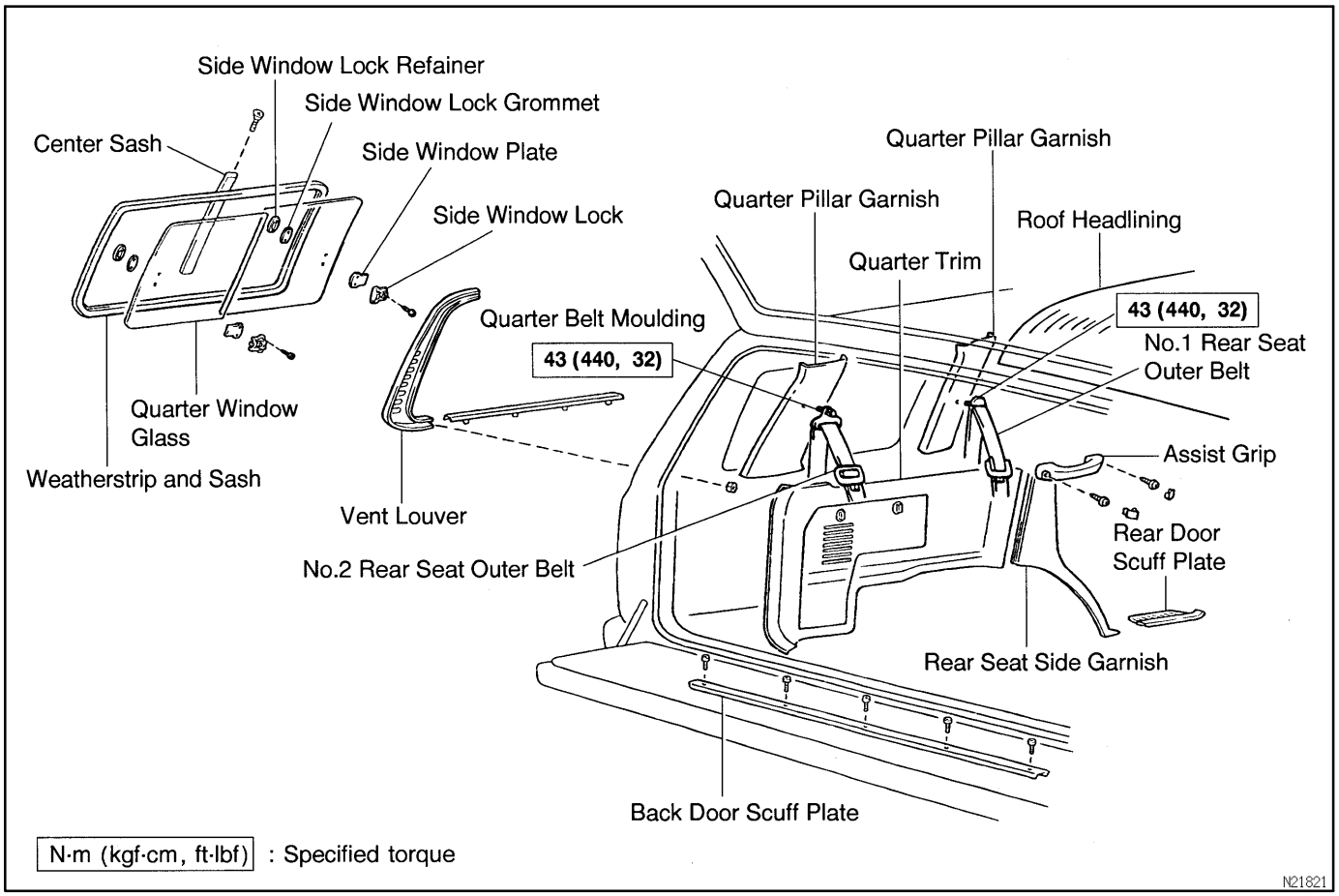
BO3G7–01