ROOF HEADLINING

COMPONENTS

BO3GT-01

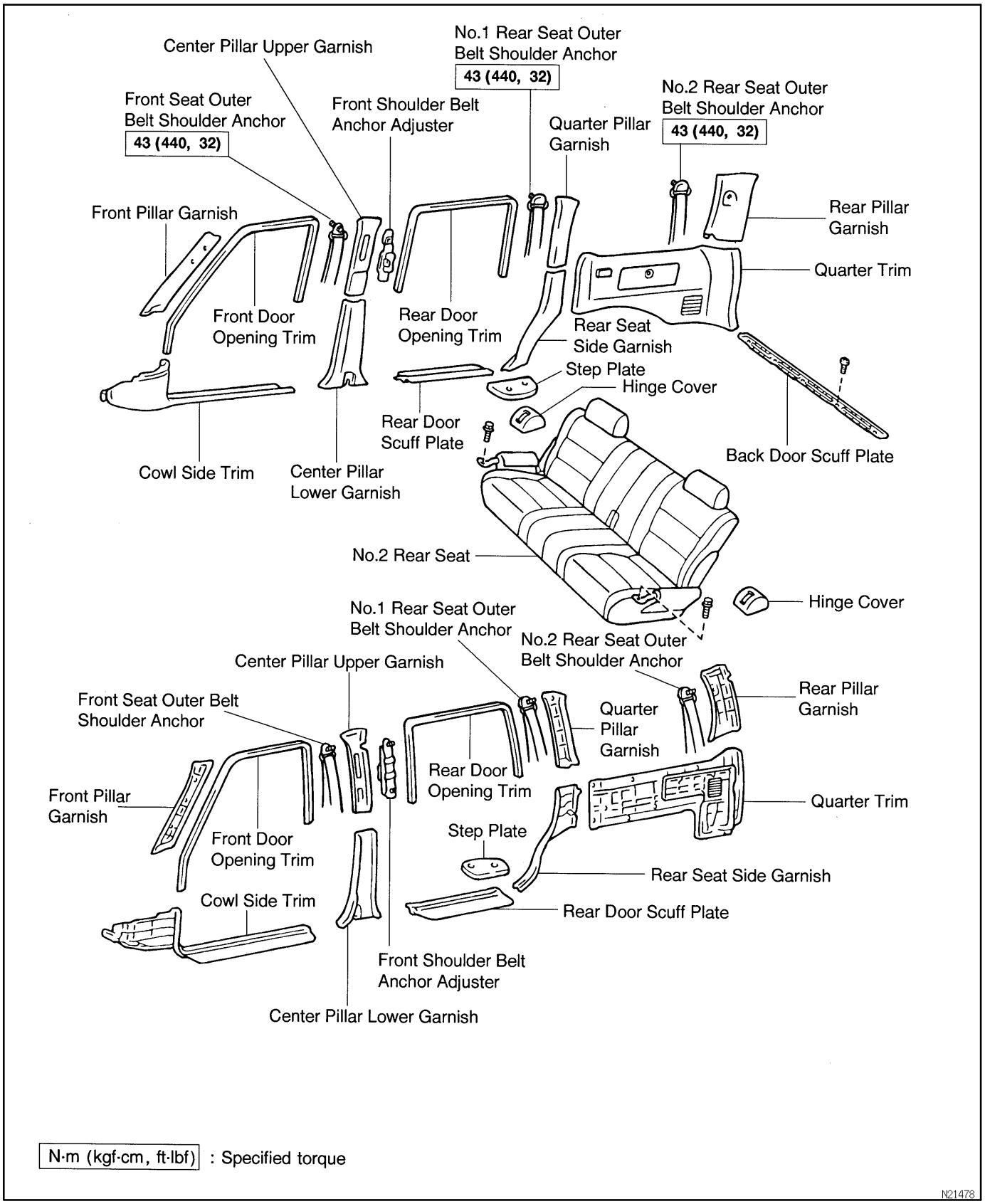

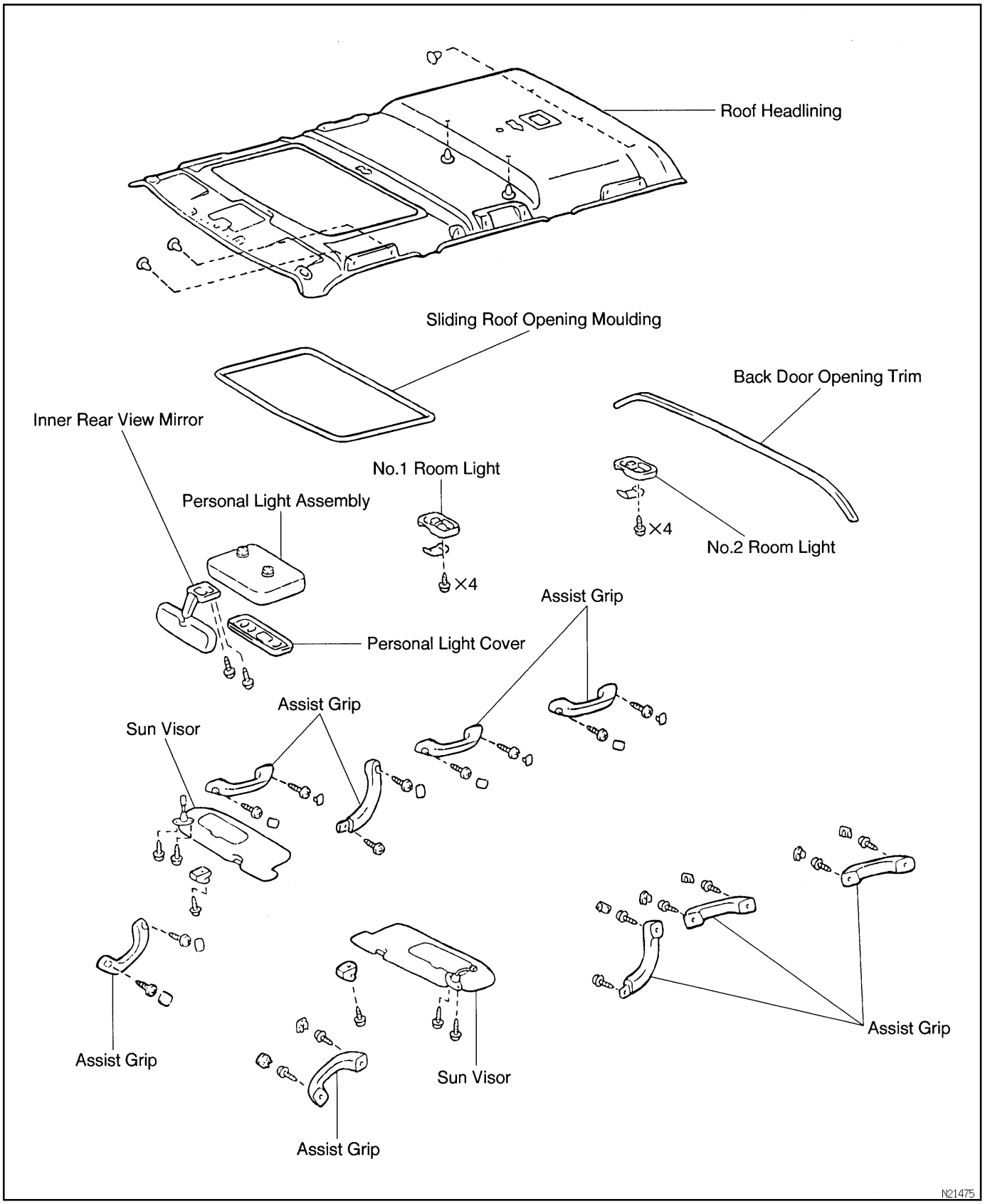
Roof Headlining
Sliding Roof Opening Moulding
Back Door Opening Trim
Inner Rear View Mirror
No.1 Room Light
Personal Light Assembly
×4
×4
No.2 Room Light
Assist Grip
Personal Light Cover
Assist Grip
Sun Visor
Assist Grip
Assist Grip
Sun Visor
Assist Grip
N21475