REAR BRAKE CALIPER

COMPONENTS
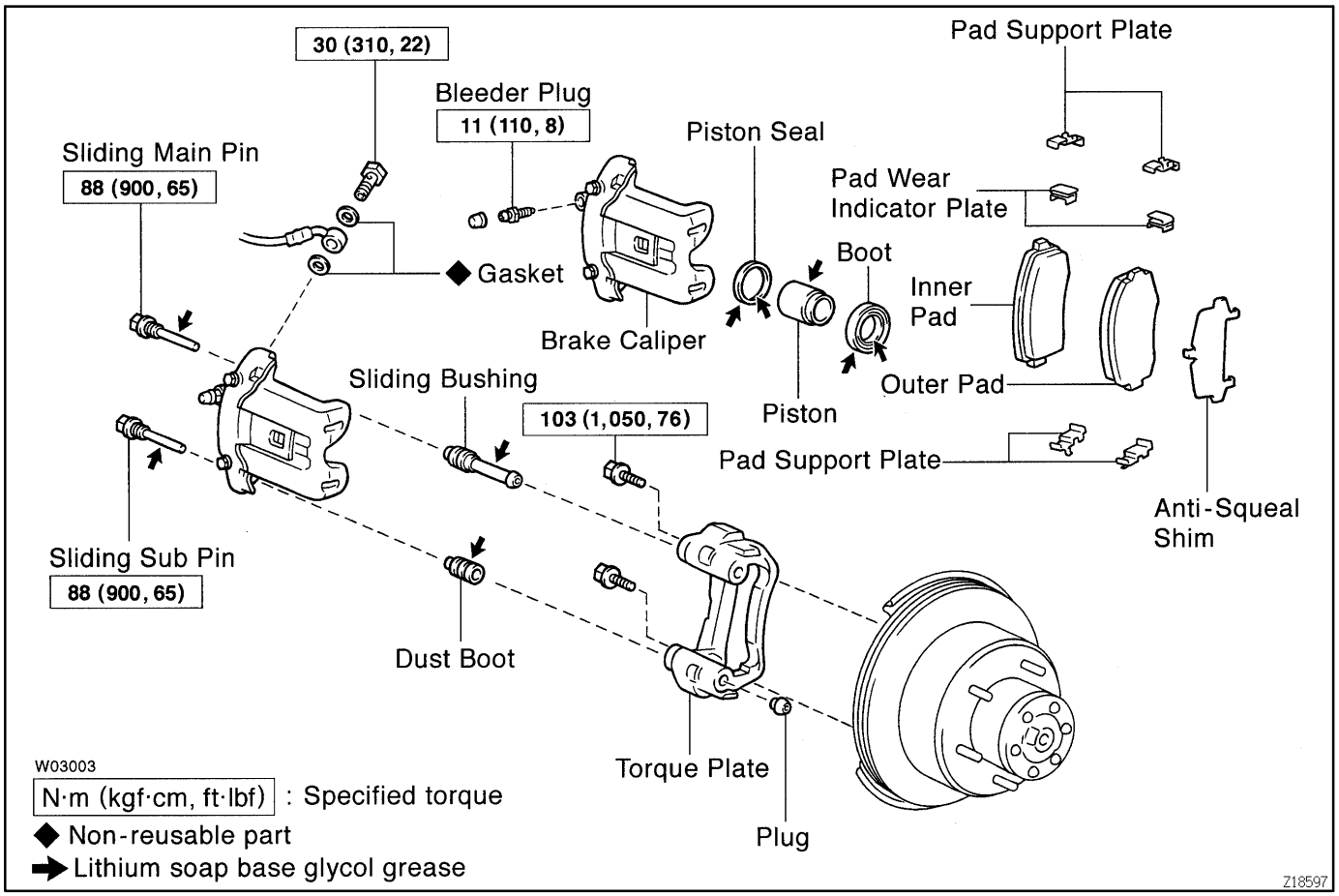
BR1D1-02